Development and implementation of a method, which can be integrated on a microchip, for reliable position and speed measurement which is used to control miniature DC motors in automotive applications

MA629

Master's Thesis
at
Graz University of Technology

submitted by

Kerstin Zangl

Infineon Austria
Designcenter Graz
and
Institute of Electronics (IFE),
Graz University of Technology
A-8010 Graz, Austria

May 7th 2010

Advisor: Ass.-Prof. Dr. Peter Söser
Advisor: Dipl.-Ing. Heimo Hartlieb

Abstract

Since the climate control within cars becomes more and more customizable and the passengers are able to control the conditioned air temperature for each individual seat, the controlling of the inlet flaps, which modulate the warm or cool air flow, becomes relatively costly. Hence designers are looking for maximum efficiency at low cost.

The goal of this thesis was to replace the existing measurement strategies for flap position detection by finding an alternative method to count the flap-motor revolutions without employing costly extra sensors. This work provides a completely new approach to measure the revolutions of a miniature DC motor. The method developed works sensorless, which means that it only needs the feedback of the motor itself. Not only the method was checked in simulation but also the measurement setup was designed and implemented on a microchip for practical measuring.

Kurzfassung

In der heutigen Zeit werden die Klimaanlagen der Autos immer spezifischer und jeder Fahrgast kann bereits die Temperatur an seinem Sitzplatz selbst regeln. Die Steuerung der Lüftungsklappen, welche die Zufuhr der warmen oder kalten Luft regeln, wird daher immer teurer. Deshalb versuchen die Ingenieure der Automobilindustrie diese Regelung sowohl möglichst billig als auch effizient zu gestalten.

Ziel dieser Arbeit ist es, die existierenden Messmethoden der Klimaanlagensysteme im automotiven Bereich zu vereinfachen und eine neue Methode zu finden, die Umdrehungen des Klappenmotors ohne die Verwendung teurer Sensoren zu zählen.

Diese Masterarbeit beschreibt einen gänzlich neuen Ansatz um die Drehzahl eines Miniatur DC Motors zu messen. Die entwickelte Methode funktioniert mit dem unveränderten Feedback des Motors und, wie gefordert, ohne die Hilfe eines zusätzlichen Sensors. Sie wurde nicht nur in Simulationen getestet sondern es wurde auch ein Mikrochip entworfen, auf welchem die neuartige Messmethode umgesetzt wurde.

Deutsche Fassung:
Beschluss der Curricula-Kommission für Bachelor-, Master- und Diplomstudien vom 10.11.2008
Genehmigung des Senates am 1.12.2008

EIDESSTATTLICHE ERKLÄRUNG

Ich erkläre an Eides statt, dass ich die vorliegende Arbeit selbstständig verfasst, andere als die angegebenen Quellen/Hilfsmittel nicht benutzt, und die den benutzten Quellen wörtlich und inhaltlich entnommene Stellen als solche kenntlich gemacht habe.

Graz, am …………………………… ………………………………………………..
(Unterschrift)

Englische Fassung:

STATUTORY DECLARATION

I declare that I have authored this thesis independently, that I have not used other than the declared sources / resources, and that I have explicitly marked all material which has been quoted either literally or by content from the used sources.

…………………………… ………………………………………………..
date (signature)

Contents

Contents **i**

Acknowledgements **ii**

1 Motor **2**
- 1.1 General aspects of motors and physical background 2
- 1.2 DC motor 18

2 Heating, Ventilating and Air Conditioning - HVAC **22**
- 2.1 General information about HVAC 22
- 2.2 HVAC Flap Actuator 25

3 Operating mode - How it is done today **27**
- 3.1 Ripple Count 27
- 3.2 Potentiometer sensor 28
- 3.3 Hall effect sensor 29

4 Developed method **31**
- 4.1 First steps 31
- 4.2 Different approaches 33
- 4.3 Detection 36

5 Chip **40**
- 5.1 Designing issues 40
- 5.2 Simulation 41
- 5.3 Layout 46
- 5.4 External circuit and controlling 49

6 Conclusion and outlook **52**

A Appendix **53**
- A.1 Chip layout 53
- A.2 Measurement setup chip 56

Bibliography **57**

Acknowledgements

I would like to thank my supervisors Ass.-Prof. Dipl.-Ing Dr. Peter Söser from the Institute of Electronics at the Graz University of Technology and Dipl.-Ing. Heimo Hartlieb from Infineon Graz for their support and help throughout my work. Also I would like to thank Infineon Austria Design Center Graz for providing and financing this thesis subject. At the company I would like to thank also Dipl.-Ing. Michael Hausmann and Dipl.-Ing. Thomas Pötscher for their theoretical and practical assistance.
Finally I want to thank my parents, who made it possible for me to study in the first place, and who gave me the time I needed to complete this thesis.

Kerstin Zangl
Graz, Austria, May 2010

Introduction

The scope of the present thesis is to find a way to measure and control the torque of a miniature DC motor without the help of any sensor. The application field for this thesis is the automotive sector, more precisely the air conditioning system within cars. Within every car there exist so-called climate flaps that control the inlet of the cold or warm air, not just for the passenger area but also for the motor bay. At the passenger area these flaps can be adjusted either manually or automatically, at the manual regulations one will most likely shift the controllers for the temperature and the inlet amount by oneself, whereas the automatic will control these regulators itself, just the input of the desired temperature is needed.

For the control of the climate flaps miniature DC motors are used. They move the flap forwards and backwards and are situated within small boxes. With the aid of gears they move an adapter which is connected to the flap.

For the actuating of the flaps it is necessary to know their actual orientation, for example if it is closed it would make no sense trying to close it any further. Also a important factor to know is the number of revolutions it takes till the motor reaches a new given position. Therefore we have to get some feedback of the motor, how many turns it already took, how fast it is and at which direction it is heading. At the moment this is done by using diverse sensors, like the Hall effect sensor and the potentiometer sensor. Because these sensors are expensive and provide additional weight as well as supplementary wiring we started to search for a new approach which does not need any sensor and can be implemented directly on a chip.

The goal is to maintain a method which can convince through its simplicity and therefore its robustness and inexpensiveness, so that it will be used within future cars.

First of all we had to get some basic knowledge of motors, especially of miniature DC motors. Therefore the first chapter deals the physics behind the working principle of a motor, including the motor and generator principle and the Lorentz force. Also we evaluate the distinction and explanation of different types of motors and we take a closer look at the DC motor itself and the commutation.

At the second chapter we provide some information about the environment of our method which is the air conditioning system of a car. In particular we are interested in its operation method and its different implementations.

Chapter 3 introduces the present methods to measure the torque of the motor within the air conditioning applications, as there are the ripple count method, the potentiometer sensor, the Hall effect sensor and the stepper motor.

In chapter four we consider and describe different approaches of measuring and explain whether they did or did not fulfill our requirements. After these different methods we finally introduce our developed idea and how we tested and proved it. Furthermore we describe why our method gives a better approach.

The design and the layout of the chip is described in chapter five which also includes simulation results and shows how the elements of the chip are chosen, respectively calculated.

Finally we sum up the achieved results and try to define the future of our developed and implemented application.

Chapter 1

Motor

1.1 General aspects of motors and physical background

A motor is a machine which converts different forms of energy into mechanical power, for example thermic, chemical or electrical energy. In this thesis we concentrate on electrical motors and in particular on DC motors. As a DC motor is an electrical motor we will discuss this type of motors in the following. As their name indicates electrical motors always produce mechanical power out of electrical energy. Important parameters of the electrical energy are voltage U and current I, whereas the mechanical energy is represented as torque M and revolution speed n.
If electrical energy is supplied and mechanical energy is dissipated we say that the machine works as a motor, like in Figure 1.1. Whereas if it is vice versa, which means the electrical energy is produced out of mechanical power, the machine is called a generator, see Figure 1.2.

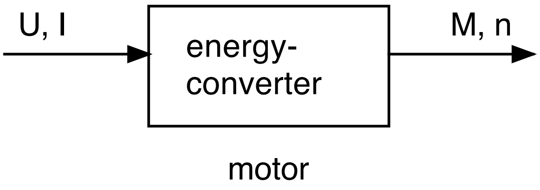

Figure 1.1: Energyconverter, at motor mode

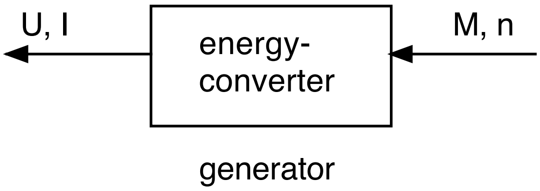

Figure 1.2: Energyconverter, at generator mode

In order to understand how a DC motor works we should take a closer look at the physics involved. Lets start with the interactions between moved charges which are exposed by the magnetic field.

Magnetic field $\vec{H}$:

Every system attempts to be closed in terms of forces. Therefore the perfect state for a system with a moving charge is to have another charge moving in the opposite direction. Thent the complete system appears to be neutral from the outside.

For example, if an electron e_1 within a ring-shaped conductor moves with a constant speed $\vec{v_1}$ and a second electron e_2 with the same speed $\vec{v_2}$ ($|\vec{v_2}| = |\vec{v_1}|$) is inserted near by, the inserted electron e_2 will change its moving direction in a way it compensates e_1, see Figure 1.3[1].
To gain this status there has to be a charge deflecting force. It is the so called Lorentz force:

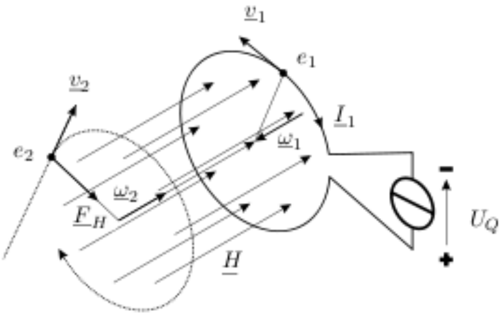

Figure 1.3: Force at a moved charge

Lorentz force:

$$F = v * B * q * \sin\alpha \qquad or \qquad \vec{F} = q(\vec{v} \times \vec{B}) \tag{1.1}$$

$$\alpha = 90^\circ \rightarrow \sin\alpha = 1$$

$$\Rightarrow F = v * B * q$$

F . . . force applied at the electrical charged particle [N]
v . . . speed of the charged particle in the magnetic field [m/s]
B . . . magnetic induction [T = Vs/m^2]
q . . . electrical charge of the particle [C]
α . . . angle between v and B
$\times$ . . . cross product
* . . . scalar product

The Lorentz force is the force $\vec{F}$ affecting the charges q at the magnetic field $\vec{H}$, which are moving with the speed $\vec{v}$. $\vec{F}$ is also the cross product of speed $\vec{v}$ and the magnetic flux $\vec{B}$, whereas $\vec{B}$ is nearly the same as $\vec{H}$, but it is material-dependent:

$$\vec{B} = \mu\vec{H} \qquad \mu \text{ . . . the material constant} \tag{1.2}$$

Since $\vec{F}$ is the result of the cross product of $\vec{B}$ and $\vec{v}$, its strength depends on the angle between them. If the charges fly in parallel with $\vec{B}$ the deflecting force is null, but with an angle of 90° degrees the force is at its maximum. The Lorentz force does neither affect the speed nor the energy but only the direction of the charges. The direction of this force is always at right angle with the moving direction and the magnetic field, see Figure 1.4.
For Figure 1.3 this means that a centrifugal force constrains the electron e_2 at an orbit with the same radius and the opposite direction of the circular path of electron e_1. As soon as this has happened the sum of the angular speed of the two electrons will be zero ($\sum\vec{\omega} = \vec{\omega_1} + \vec{\omega_2} = 0$). As

---

[1] picture taken from [18] page 81

conclusion it can be said that, from the external view, also the angular momentum L of all moved charges in the system will be zero.

$$\vec{L} = \sum_i \Theta_i \vec{\omega_1} = \sum_{i=1}^{2} (m_e \vec{r^2}) \omega_i = 0 \tag{1.3}$$

r … radius of the ring-shaped conductor
Θ_i … the moment of inertia of the rotating electrons
m_e … the mass of the electrons

Figure 1.5[2] shows how the Lorentz force exactly works. The electron will make a constant, circular motion till it leaves the magnetic field after 180°.

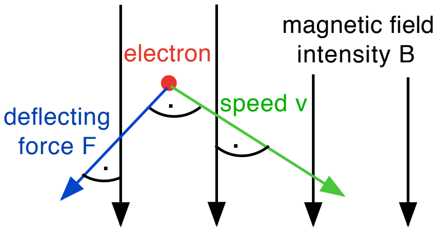

Figure 1.4: Lorentz force

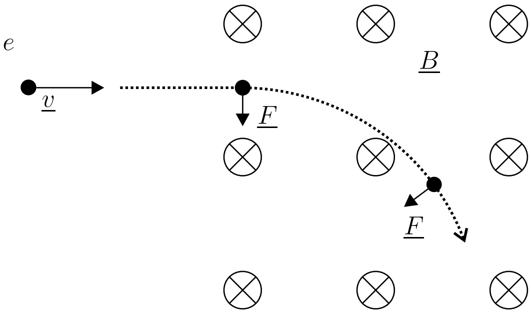

Figure 1.5: Deflected electron within the B-Field

With this information about the magnetic field and the Lorentz force we have the knowledge we need to take a closer look on two basic principles, the motor and the generator principle. The whole electrical drive engineering is based on these two constraints.

Motor principle:

electrical current + magnetic field => movement

A special force acts on a conductor within a magnetic field, if current is applied to it while it is located within the magnetic field, the Lorentz force takes effect. The resulting direction of the force is determined by use of Fleming's left-hand rule, see Figure 1.6[3]. Whereas the size of the

---

[2] figure taken from [18] page 91
[3] figure taken from [11]

force is determined by equation 1.4.
F will be at its maximum if the direction of the current and the magnetic field are at an right angle. Because of this affecting forces the rotor of a DC motor will begin to turn.

$$\vec{F} = I * (\vec{\ell} \times \vec{B}) \qquad \text{or} \qquad F = B * \ell * I \qquad \text{if } \ell \perp B \tag{1.4}$$

F . . . force
I . . . current
ℓ . . . length of the conductor
B . . . magnetic flux density

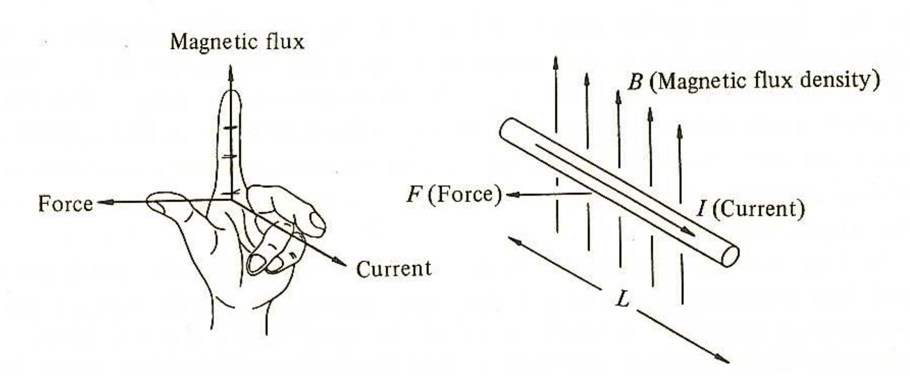

Figure 1.6: Fleming's left hand rule

Generator principle:

movement + magnetic field => electrical current

This principle shows that if a conductor moves within a magnetic field, voltage and therefore current is induced within, as shown in Figure 1.7[4] and described in equation 1.5.
The same effect could be obtained if the wire is stationary and the field is moved.The direction of the current flow is determined by the direction of the magnetic field and the direction of the movement, cf. Figure 1.7.

$$U_i = B * \ell * v \tag{1.5}$$

U_i . . . induced voltage
B . . . magnetic induction
ℓ . . . length of the conductor
v . . . speed of the conductor in the magnetic field

For electrical machines the motor and the generator principles are taking effect at the same time. There is only one exception, the halt.

---

[4] figure taken from [11]

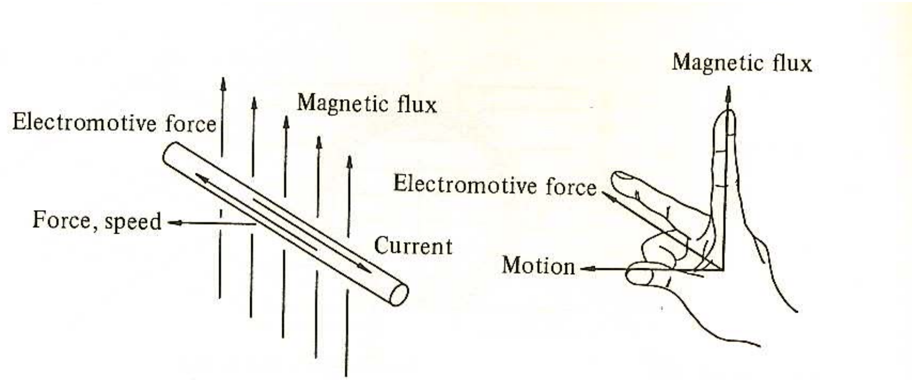

Figure 1.7: Fleming's right hand rule

1.1.1 Theory sum up

Every DC motor uses the action of force that takes effect on a current-carrying conductor within a magnetic field. On a conductor with length $\vec{l}$ within a magnetic field of flux density $\vec{B}$ and the carried current $I = \Theta$, the following force $\vec{F}$ is taking effect:

$$\vec{F} = \Theta * (\vec{l} \times \vec{B}). \tag{1.6}$$

The direction of the current is the same as that of vector $\vec{l}$. If, instead of a conductor, an inductor with the windings N is applied, the magnetic flux becomes

$$\Theta = I * N. \tag{1.7}$$

The value of the force $\vec{F}$ is determined by

$$F = \Theta * l * B \tag{1.8}$$

if $\vec{l}$ is orthogonal to $\vec{B}$.
During the movement of the coil with the speed v along the action of force the voltage

$$U_q = v * N * l * B \tag{1.9}$$

is induced.

We assume that the ohmic resistance within the inductance is zero and therefore there is no dissipation loss by the current I. Then the voltage source has to supply a voltage U amounting to U_q. The voltage U forces, according to (1.9), the speed of coil motion.
Corresponding to the equation (1.8) the magnitude of the current depends only on the applied force F.

The electric power P_{el}, that is served by the voltage source, is determined by

$$P_{el} = U * I = (v * N * l * B) * I \tag{1.10}$$

$$P_{el} = U * I = (I * N * l * B) * v = F * v = P_{mech} \tag{1.11}$$

The above equations are of course idealizing, with $P_{el} = P_{mech}$ the efficiency would be 100%. In practice it would be smaller, on the one hand a higher voltage than U_q has to be supplied because of the voltage drop caused by losses and on the other hand the ’inner force’ F is also reduced by retarding powers within the motor which cannot be avoided, like friction.

1.1.2 Survey on electrical machines

There are many different types of electrical machines. To give a short overview we are going to classify them first by their way of energy conversion and furthermore by their functional principle.
All electrical machines can be divided into three sections according to their dissipation of energy:

Rotating electrical machines:

A rotating electrical machine is either working as a generator or as a motor. It consists of two windings, which are generally attached on two separated mountings, the stator and the rotor. The first winding provides the magnetic flux, it is known as excitation winding. The supply occurs by time-invariant (DC) or time-variant (AC) current. The second winding is referred to as the armature winding, but this does not necessarily mean it is attached at the armature. Within this winding the self-induction is happening, caused by the change of the magnetic flux in time.
If the electrical circuit of the armature winding is being closed, the armature current starts to flow, generating another magnetic flux. Now the two magnetic fluxes from the excitation and the armature winding interfere with each other, which is denoted as armature reaction and is the reason of the 'electrodynamic torque'.
The two physical laws behind the above scenario are:

- the law of induction ($U_{ind} = -N\frac{d\Phi}{dt}$) and
- the law of force (F = m * a)

These two principles are always acting together at the electromagnetic conversion of energy and determine by their energy flow if the rotating electrical machine works as generator or as motor.

Motor generators:

They are a special form of the rotating electrical machines as they do not build up an electrodynamic torque but an 'electrical transmitted power'.
Their skills are the changing of electrical parameters (voltage, current, frequency) while transformation (for example frequency converters, or synchronous converters). A synchronous converter in particular transmutes a 3-phase alternating current into a direct one.
Not within this group are electrical devices that change electrical parameters without electromagnetic aspects, but with switching operations. They belong to the topic of electronic power converters because they are most exclusively build for power electronic applications.

Transformers:

Transformers are electrical machines that have both windings applied on a fix iron core. They also use 'electrical transmitted power'. At approximately steady capacity the parameters of the voltage and the current at the input and output are changed with a constant frequency. They are often used as power transformers at power engineering, as transmitters at communications engineering and as current or voltage transformers at the measurement technology.

This was the classification of electrical machines by their energy conversion, now we turn to the division by the functional principle.

Commutating machines:

At commutating machines the current is brought to the armature by a commutator and sliding contacts, known as brushes. If current is also floating through the rotor another magnetic field is arising, interacting with the magnetic field of the stator. Therefore the rotor revolves around its own axis and with the help of the commutator it shortens the correct windings to keep going. Electrical work is converted into mechanical force.

Commutating machines have a high significance on direct current and one-phase alternating current. Their maximum torque is beyond 3000 min^{-1} and they can be produced in a small and lightweight way. Despite that there are some disadvantages. These machines are not very durable, they are noisy and comparatively high priced.

Asynchronous machines:

These machines are based on the principle of a relative movement between the circulating magnetic field of the static winding system and the mechanically moved winding system. In operation the rotor always falls behind the circulating stator field with his revolution speed, so that the asynchronous generator hast to be driven with higher engine speed than the required stator frequency.
It is the mostly used machine nowadays and it is being produced for power up to several megawatt. The unique advantage of this motor is the absence of the brushes and the commutator. Hence there is no brush sparking and no high frequent oscillation is perturbing the network. Certainly there is also a disadvantage, which is that asynchronous machines exhibit harmonics, especially when connected to a frequency converter.

Synchronous machines:

A synchronous machine is classified by the way the rotor and the stator interact with each other. The rotor, which is permanently magnetized, is taken synchronously along with the stator by a rotating magnetic field. The operating motor has a synchronous movement to the alternating voltage. Therefore the torque is connected with the frequency of the alternating voltage by the number of pole pairs.
An advantage of this kind of machine against commutating machines is the loss of the commutator, hence the attrition of the brushes can be omitted and the efficiency factor increases.
Its advantage over the asynchronous machine is the fix linking of the torque and the angular position to the operating frequency. For this reason synchronous machines are perfectly qualified for actuators and other applications which demand a stress independent, stable torque. Their disadvantages are the difficult self-start at the three-phase power system and their objectionable rotational vibration of the rotor, caused by irregular loading and current feed. This could lead to an overstepping of the breakdown torque which results in an unsteady turning movement.

After this general overview on the different types we now concentrate on electro motors and want to point out their varying classes.

1.1.3 Electro motors

Roughly electro motors can be divided into direct current (DC) and alternating current (AC) engines, but that is only half of the truth. This division is rather a general norm than a definite rule because there are so many types of motors that cannot be assigned to one of these two categories. As an example a lot of DC motors work fine as well with AC power. In addition more and more motors are controlled with electronic devices nowadays, which means the commutator is driven outside the motor, as for example at brushless DC and stepping motors.

A second differentiation, which fits nearly all motors, is to distinguish between synchronous and asynchronous machines. After a short glance at the following Diagram 1.8 we will discuss the miscellaneous motors. Figure 1.8 shows a little example of how the big field of electro motors can be divided but it does not claim to be complete, as already mentioned above. There are far too many different building techniques and modes of operation. The first two divisions show the category of DC and AC motors with their characteristic subgroups. For the DC types this would be brushed and brushless motors, which too have their specialized forms. The core-less and the printed armature motors which can be designed both ways, brushed and brushless.

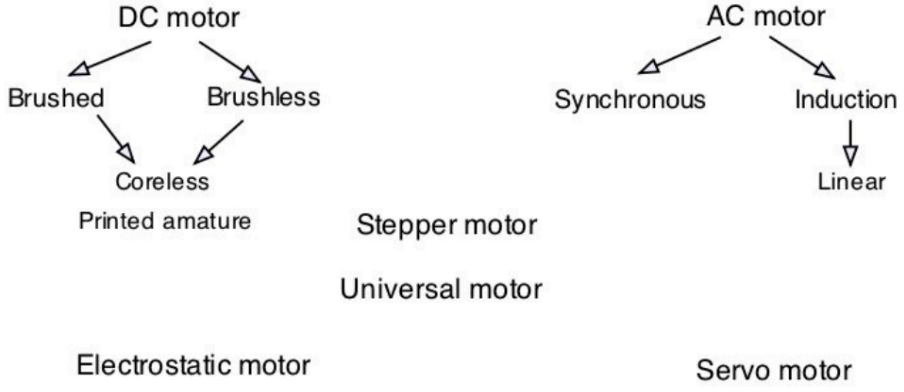

Figure 1.8: Motor classification

AC motors can be divided into synchronous and induction machines, the last-mentioned motor has a special form as well, the linear motor.

In the middle between the DC and AC motors there are the stepper and the universal motors which can be considered as neither the DC type nor the AC one.

The electrostatic and servo motors are special cases of electro motors too.

DC motor

As the name implies DC motors run at DC electric power. They generate an oscillating current with the help of an internal or an external commutator, which exactly is the distinction between brushed and brushless DC motors.

A DC motor can be of the permanent or electric excited type. Within the permanent excited motor the magnetic flux of the stator is provided by a permanent magnet which mostly is the stator itself. At the beginning of permanent motors they could not keep up with the electric excited motors in terms of power, but with the evolution of the DC motors and the magnets the gap between these motors continuously decreased and today there is no difference at all. Although there is a variation at the price, for big motors the price of a permanent magnet is usually much higher than those of a field winding. This is the main reason why the permanent motor type is especially used at small motors, like the ones in toys or in various units of automobiles (heating and ventilating, electric window lift, wipers (see Figure 1.9)).

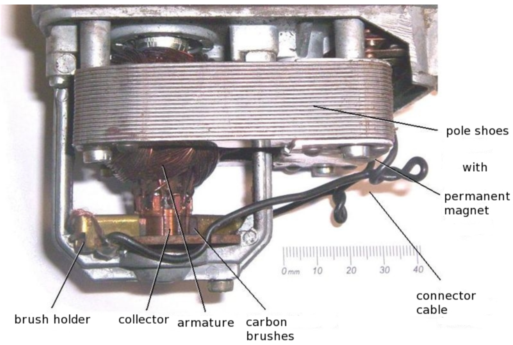

Figure 1.9: Permanent magnet motor as wipe motor of a Trabant

The stator of the electric excited motors consists of an electro magnet which is responsible for the magnetic stator field. An electro magnet is composed of a coil that induces a magnetic field by the flow of current. Within the coil there is usually an iron core which amplifies the magnetic field.
This class of motors is divided into two types, the motors with the exciter winding connected with the armature winding are called separately-excited (sepex) motors and the ones with connection between these two windings are the wound motors.
Wound motors are as well divided by the way their electrical connection takes place:

- **shunt-wound motor** - the field and armature coils are connected in parallel (A)
- **series-wound motor** - the field and armature coils are connected in series (B)
- **compound-wound motor** - combines the first two motor variants, it has a series- and a shunt-wound winding and shows varying operating behaviour, which depends on its dimensioning (C)

The circuit of this three motor types can be seen on Figure 1.10.

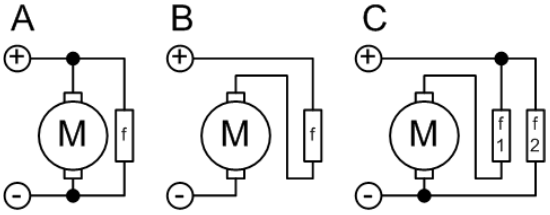

Figure 1.10: Wound motors
A - shunt
B - series
C - compound
f - field coil

At the separately-excited motor the field and armature coils are supplied by different voltage sources. While at the shunt-wound motor the exciting voltage is equivalent to the armature voltage, it is possible to change the torque of a sepex motor by decreasing the exciting current (the machine will go faster) or by decreasing the armature voltage (the machine will slow down).
Compared to the permanent magnet motor the sepex motor has one big advantage. It is possible to change the magnetic field of the coils very fast. Nevertheless there is also a drawback. Electromagnetic motors always need the supply of electrical energy, otherwise the magnetic field would collapse.

Brushed motors

The most important parts of these motors are the commutator and the brushes, which establish the power supply of the rotor and take care that the current flows through the proper armature coils.

The brushes must withstand extreme conditions, like heat and abrasion, they were generally made of copper, but this used to abrade the softer commutator and to contract, owing to the grinding. Also the powder of the wear could soil the segments of the commutator, shorten them and so decrease the efficiency of the motor. The next material used was carbon, which does less damage to the commutator, provokes less sparking and has more abrasion resistance than copper, therefore fewer abrasion dust is contaminating the commutator.

Nowadays both materials are still used, copper brushes for low voltage and high amperage and carbon brushes for high voltage and low amperage. Also carbon brushes mixed with copper powder (to enhance the conductivity) are in heavy use, as graphite brushes for small and miniature motors. Two different brush types could be used within one motor, as all model railways of one well known concern use one graphite brush and a copper wire meshwork one, which cleans the contact surface. More details about the working principle of brushed motors can be read in the following section 1.2.

Brushless motors

The working process of DC motors is very efficient if it was not for the components needed for the commutation. The commutator and the brushes are very likely to wear and from time to time they need replacement. By eliminating these disruptive factors the DC motors became nearly maintenance-free.

The commutator is replaced by extern electronic switches. The structure of these motors is much more alike an AC motor than a DC. For the stator there are the three-phase armature windings and the rotor consists of one or more magnets. Nevertheless Brushless DC (BLDC) motors are not the same as AC motors because of their need to detect the rotor position by some kind of signal, to transmit the information to the control units. These motors usually have a Hall element to determine the position of the rotor, but also potentiometers and optical sensors are in use. To see how a BLDC works we will have a closer look on it. Figure 1.11[5] shows a brushless motor with three-phase windings and three optical sensors (phototransistors), which determine the position of the rotor. The three phototransistors (PT1, PT2 and PT3) are placed at 120° degree intervals and by the movement of the revolving shutter, which is connected to the rotor, each one of them alternately catches light. At the figure we see that the south pole of the rotor faces the pole P2 of the stator and PT1 is exposed to the light. Now PT1 turns on transistor T1. Therefore current is flowing through winding W1 and creates a south pole which attracts the north pole of the rotor. By moving in counterclockwise direction the rotor also moves the shutter and PT2 detects some light. The current now flows through transistor T2 and winding W2, causing P2 to be a south pole. The rotor is right away attracted by P2, turning on to enlight the phototransistor PT3. Thus PT2 gets darkened again and P2 is down to zero-potential while P3 becomes a south pole. This routine goes on and on, the north pole of the rotor is always heading after the south pole of the stator that switches continuously.

Because of this inner construction one of the advantages of BLDC motors is that they have a longer lifespan, there is no commutator or brushes abrasion and too no dust to soil the commutator segments. Furthermore they are not as noisy as the brushed motors, there is no brush sparking and the electromagnetic interferences (EMI) are minimized. The cage of the motor is completely sealed off from dirt and any other disturbances from the outside. And at least they have more power and therefore a higher efficiency (85 - 90%), which is far more better than the brushed motors with just 75 - 80% effectiveness.

---

[5] figure taken from [11] page 59

The one big disadvantage of BLDC motors is their expensiveness, compared to brushed DC motors. The main reasons therefore are the extern commutation control and the speed controller.

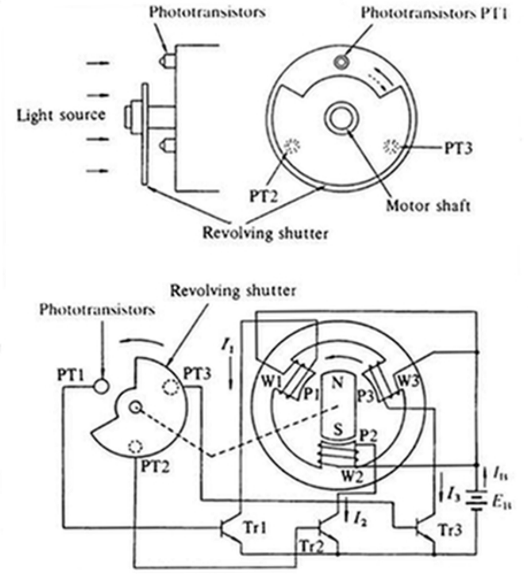

Figure 1.11: Brushless DC motor with optical sensors

Coreless motor

This sort of motor does not have any iron core. It uses the fact that the torque is generated on the windings. Usually at this motor the windings are wounded up as a tube, bonded by epoxy resin. The stationary magnets or the permanent magnet lie within these windings and the outer cage of the motor serves as back iron of the magnetic stator flux.

These motors are built for small machines up to 100 watt. They are free from iron loss due to the fact that there are no iron parts which have to change their magnetization, as a result higher efficiency can be reached at high rotational speed.

The disadvantages of coreless motors are the big air gaps between the stator and the rotor which cause a loss of magnetic flux density and the construction of the windings, mostly self-supporting, which have to endure high centrifugal forces.

Printed armature motors

This kind of motor is also known as pancake motors because it has the shape of a disc. The rotor is a plate with the windings applied onto the panel. It is very easy to recognize because of its flat body and its diameter which exceeds its length.

Two types of printed armature motors exist:

Printed armature motor with iron-free rotor

At this motor the windings are either implemented by the form of conductor paths on thin insulating layers, or by compact copper- or aluminium conductors. The disc turns within a small gap between permanent magnets, which generate a constant magnetic field. The magnetic circuit is closed by some magnetically soft material beyond the plate and the current is brought in by carbon brushes.

Due to the fact that the plate can be constructed very lightweight, it has a low torque moment and is able to accelerate and decelerate very fast, nearly within a millisecond. They rotate very smooth, also at low revolution speed and their architecture with slim windings ensures that they are well chilled, because the big surface provides very good heat dissipation. Due to the good heat emission pancake motors can be driven with high current density, but as the effective heat capacity of the disc is very low there is always the risk of destruction by a temporary overload.

Brushless printed armature motor

They are a very special form of the pancake motor, usually they work as synchronous or stepper motors. For the use with direct current an electric commutator is required.

This motor has a permanent magnet as disc and fixed coils on it that generate the magnetic field. Stator and rotor are interchanged to the motor described above. The advantage of this adjustment is, as always at brushless motors, the absence of the brushes, which provides much more reliability of the motor, though the higher mass of the permanent magnet interferes with quick acceleration.

AC motor

An AC motor is, like the name is implicating, driven by alternating current. It consists of a stator and a rotor like the DC motor but with one big difference, there is no commutator. The windings at the stator are generating a spinning magnetic field, caused by the alternating current, which pushes the rotor. The synchronous and the induction motor are the two big typical embodiments of this kind of motor, distincted by the form of their rotor .

Synchronous motor

The synchronous motor has its name due to the fact that the rotor is revolving as fast as the magnetic field of the stator. The magnetic field is created by symmetrically arranged coils, for example three coils set up at the interval of 120° degrees, that is supplied by alternating current. The resulting field rotates with the power supply frequency and the rotor, which is most likely a permanent magnet, is driven by it. The north pole of the stator field faces the south pole of the rotor and vice versa, therefore it is rotating as fast as the stator field, which means it is turning synchronously.

The problem of this motor is its trouble at the starting process, till the rotor has the same speed as the stator field. Yet there is a solution, the squirrel-cage rotor. By installing this squirrel cage the motor could start as an asynchronous motor up to the fitting velocity.

Synchronous motors are used in situations with need of constant revolution speed, such as miniature motors within watches, or high performance at permanently running machines.

Induction motor

Induction motors are also called asynchronous motors, because, unlike the synchronous motor, the rotor does not synchronize with the stator field.

The difference between these two motors is, that at the synchronous one current is applied onto the rotor, whereas at the induction motor a second current is induced at it. This works as follows, the stator winding generates a revolting magnetic field which induces current within the conductors of the rotor. This current interferes with the stator field and generates a torque of the rotor. Anyhow the rotor has to move slower than the magnetic stator field, this is called 'the slip', otherwise the stator field would not move right ways to induce current within the conductors of the rotor. The slip is the difference between the frequency of the stator field and and the rotor speed.

$$s = \frac{n_0 - n}{n_0} \tag{1.12}$$

s ... slip
n_0 ... revolution speed of the magnetic field of the stator
n ... revolution speed of the rotor
p ... number of pole pairs
f ... supply frequency

f_r ... frequency of the rotor

The speed of the stator field is proportional to the supply frequency and can be calculated with

$$n_0 = \frac{1}{p} * f \tag{1.13}$$

whereas the rotor frequency f_r is given by the relative moment $n_0 - n$ multiplied with the number of pole pairs. With this knowledge we can prove that the slip also shows the connection between the frequency of the stator and the rotor.

$$f = n_0 * p \tag{1.14}$$

$$f_r = (n_0 - n) * p \tag{1.15}$$

$$s = \frac{(n_0 - n) * p}{n_0 * p} = \frac{f_r}{f} \tag{1.16}$$

Induction motors are the most common motors in use, they are very effective, robust, simple at the construction and as they do not have any spare and wear parts (like brushes or the commutator) they need only low maintenance

Linear motor

Linear motors are a subgroup of the induction motors. They do not generate a rotational movement but a linear one, a translatory motion. A linear motor has the same functional principle as an AC motor but its excitation windings are not arranged circular but on an even range. Therefore the rotor does not rotate but is attracted lengthwise by the magnetic field. It is to imagine like an unreeled AC motor.

This motor can be build at any length and with curves which is shown by its application area, mainly trains/rails (Transrapid, roller coasters, Monorails), transport systems and within machine tools. At this area they replace the rotating motors which had to have a special gear to transforme their rotational force into a translatory one.

Stepper motor

This motor has the ability to rotate less than one revolution. It has a special control which is able move the rotor step by step. This is realized by electromagnets which are placed around the rotor and controlled by some external circuit, most likely a micro controller. How many magnets there are depends on how small the steps of the motor should be. The more magnets the more steps the rotor will need to turn one round. In Figure 1.12 we see four magnets. Actually switch three is closed, by closing switch four and opening switch three again the motor will turn one step counterclockwise and stop again. We see that it is possible to move the motor just a precise amount of steps and the angle depends on the number of electromagnets present. Usually more than four magnets are used.

The rotor can either be a permanent magnet or a soft-iron core. The latter one looses its magnetization as soon as the stator current is turned off, but if it is turned on, the magnetic flux runs through the core of the rotor and the rotor is attracted by the next electromagnet of the stator to reduce the magnetic resistance.

The stepper motor with the permanent magnet rotor has a stator which is made of soft-iron. The permanent magnets on the rotor are adjusted in a way they alternately feature a south and a north pole. The rotation is based on the adjustment of the stator field in order to keep the rotor turning.

In order to gain the best possible effectiveness of stepper machines there exists another sort of stepper motors which combines the principles and positive features of the two above motors, the hybrid stepper motor.

Nowadays the hybrid motor is the most common stepper motor, it can be found within printers, plotters, hard disk drives, fax machines, automotive applications, computer-controlled industrial machines and so on. They have a very wide ranged application field which is only limited by their power of 1 kW maximum.

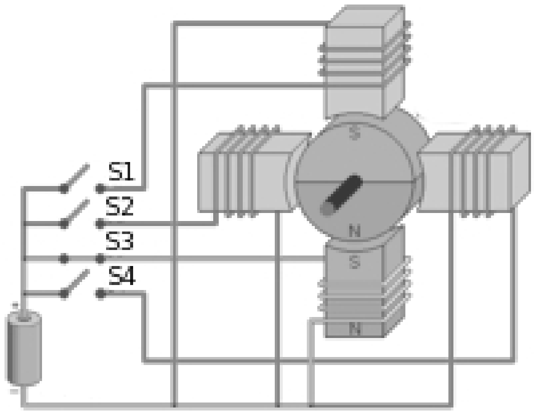

Figure 1.12: Stepper motor with four steps per rotation

Universal motor

A universal motor can be driven by AC as well as DC power. It is built like a series-wound motor except for the stator which has to be made of iron sheet. Universal machines operate on AC because of the serial connection between the armature and the excitation windings. Their currents are in phase which implicates that they always change their sign together and the direction of force and rotation stay the same.

Today they are operating with alternating current in general, especially at areas with need of powerful motors at minimum costs. For example they are very common within home appliances like hoovers, coffee mills, blenders and kitchen machines.

Electrostatic motor

Conventionally electrical motors are based upon the electromagnetic energy to convert electricity into mechanical power. Nevertheless there is a second class of motors which uses electrostatic energy to run a motor. The theory of their functional principle is based upon the Coulomb forces between charged electrons, they cause attraction and repulsion between the stator elements and the rotor.

Since it is very difficult to save capacious electrostatic charges without loss, these motors are used primarily at fields which need high revolution speed at small-sized dimensions, like the nanotechnology. At this field of interest the supply voltage amounts up to multiple kilovolt which suits the electrostatic motor because needs high voltage too and it is possible to manufacture it in 2-D, which enables the use at the macroscopic area.

Servo motor

The servo motor is not a motor itself, it is a category of motors with servo controllers. It can be any kind of motor, a DC or an AC one, the difference is the drive level and the fact that a servo motor is driven only within a closed loop system.

It consists of a motor, a controller and a feedback device. The motor hast a special assignment to perform, the motor profile, which is a set of instructions with the parameters of time, speed and position. With the help of the feedback device, which can be a resolver, an incremental or absolute encoder, the controller always checks the motors velocity and position and is able to change the current run to gain a perfect match between the motor profile and the feedback.

Servo motors can be found within industrial factories, remote controlled cars, ships and planes and because of their reliability also within display units of the military and air-crafts. They are used as well at modules with field bus interfaces, for instance CANopen (Controller Area Network).

1.2 DC motor

As discussed above this motor can be build in various forms, with or without brushes, with permanent or electro magnets, core-less or flat. Since the miniature motors used within this work are permanent magnet DC motors we will discuss this kind of motor in detail.
Figure 1.13[6] shows the principal construction of a DC motor, consisting of a rotor, a stator, a commutator, two brushes and a housing.

Rotor: the part of the motor that turns
Stator: the immobile part of the motor
Brushes: they are responsible for the power supply of the motor
Commutator: is connected with the brushes and assures that the motor is running constantly

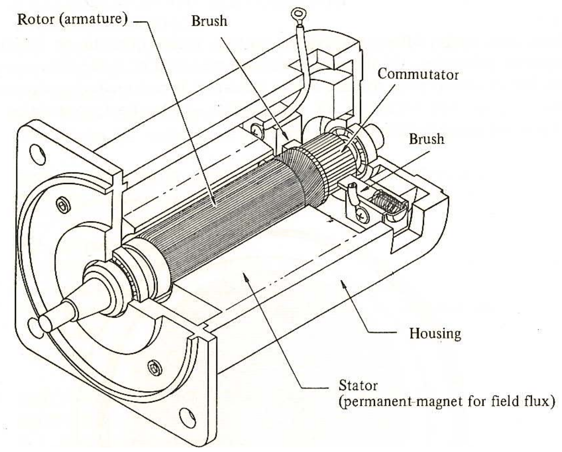

Figure 1.13: Schematic of a DC motor

The housing is the body of the motor. At miniature motors it is not more than a guard plate which protects the components of the motor. The stator consists of the poles, which either can be permanent or electro magnets. Usually electro magnets are used within DC motors, but as discussed above we will focus on the permanent magnet type of motors.
The number of poles per motor varies and depends on the type of the motor. The minimum number is 2 (pairs of poles $p = 1$), which is the case for the discussed motors. In general DC motors have 4 or more poles because of a better concentric run, however the motors used in this work are too small as this would really take effect.
The brushes are used to connect the moving parts within the motor with the stationary wires. At our motor this would be the rotor, respectively the coil on the rotor. Brushes are usually made of carbon or copper. For more detailed information please have a look at section 1.1.3 'Brushed motors'. Normally they are connected to the rotor with a spring to be pushed at the commutator.
If the current is brought to the coils by the brushes and the commutator, owing to the motor principle and Fleming's left hand rule (Figure 1.6), the magnetic field of the stator and the rotor will interact and the resulting forces will turn the rotor perpendicular to the field. According to the forces of the field the conductor (which the rotor, supplied with current, is) would stop within the so called 'neutral zone', like in Figure 1.15. Therefore the direction of the force F has to be changed every time the rotor passes the 'neutral zone'. This is done by changing the polarity of the current, therefore the forces at the rotor change their orientation and again turn the rotor on. If this gets a repeating procedure the rotor will keep on turning round per round until the power is switched off. At Figure 1.16 the middle drawing we see

---

[6] figure taken form from [11] page 2

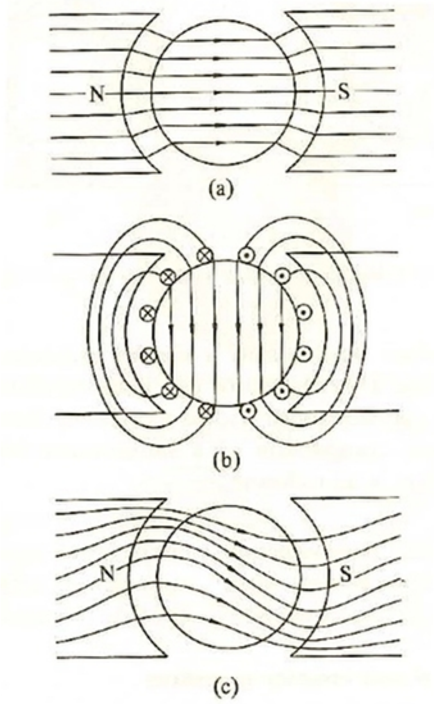

Figure 1.14: Field system

how the forces react at the change of polarity and the ongoing turning of the rotor. At Figure 1.14[7] the field system of the motor is shown. Picture (a) shows the magnetic flux generated by the permanent magnet of the stator, it flows from the north to the south pole, right through the rotor. Figure (b) demonstrates the flux of the armature if current is applied. The symbol $\otimes$ means that the flux is flowing away from the observer and $\odot$ means that the flux comes towards him. The sum of these two fluxes can be seen at the illustration (c).

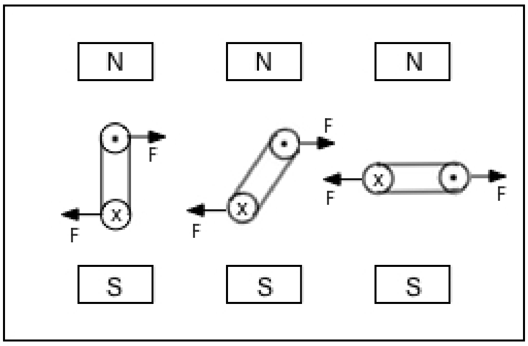

Figure 1.15: Conductor loop, not commutated

Commutator and commutation:

The commutator is the element of a motor which is responsible for the change of the current within the windings at the right time in case of a stable torque.

A commutator consists of the commutator segments and the risers. The segments are usually made of copper and isolated from the windings, with which they share the number - there are as

---

[7] figure taken form from [11] page 26

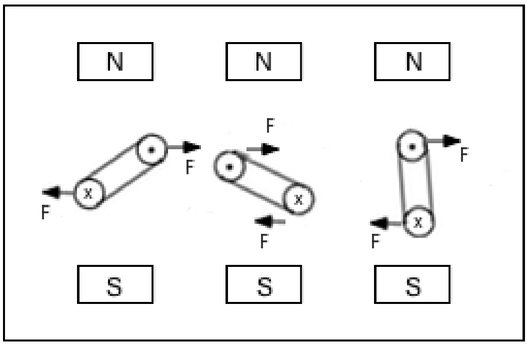

Figure 1.16: Conductor loop, commutated

many segments as coils. At Figure 1.17a we see three of them, two in the foreground and one in the background, under and between the segments there are the windings. The terminals of the windings are connected with the risers, also shown at Figure 1.17a. The commutator and the brushes (see Figure 1.17b) are forming a so called sliding contact.

In Figure 1.18 we see the current supply before, during and after the commutation of a winding. The commutation current i_c is changing from $\frac{+I}{2}$ to $\frac{-I}{2}$ within time t_c:

$$t_c = \frac{w_c}{v_c} \tag{1.17}$$

t_c ... time of the commutation
w_c ... width of the segments
v_c ... circumferential speed

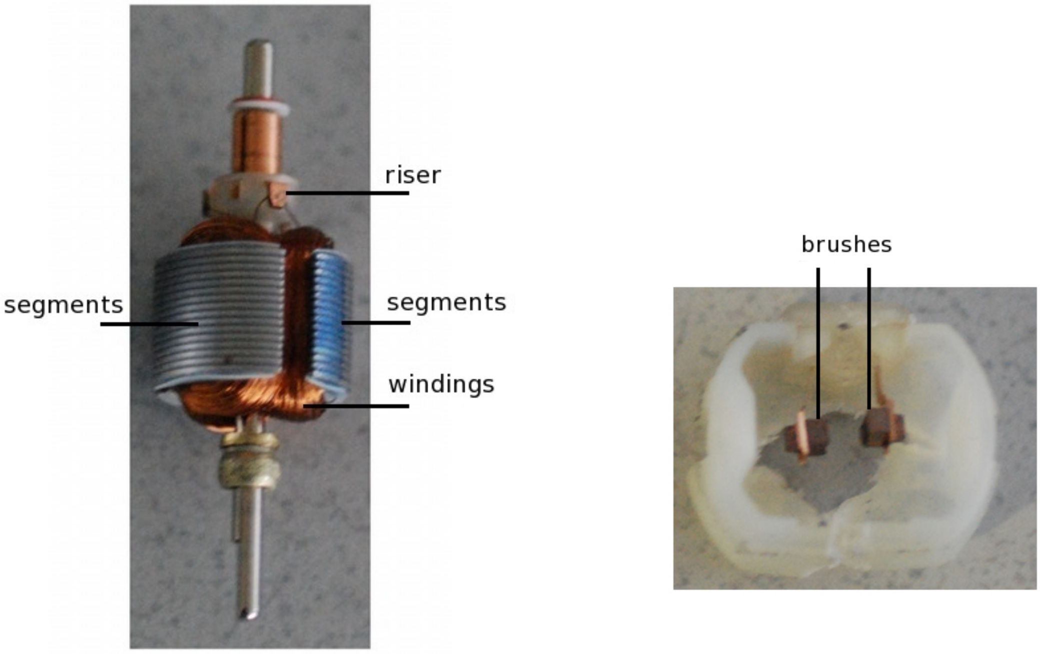

(a) Commutator **(b)** Brushes of miniature motor

Figure 1.17: A deconstructed miniature DC motor

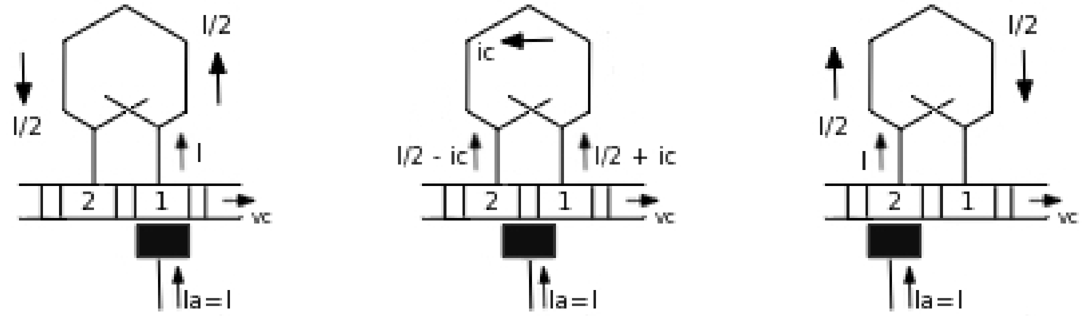

(a) Before the commutation

(b) During the commutation

(c) After the commutation

Figure 1.18: Commutation process

This action occurs linearly, under the assumption of an unresistant coil which parts are within the 'neutral zone'. Yet in fact there are leakage inductances which can not be disregarded. They appear within the coil, which lies in a ferromagnetic circuit and therefore there do appear diversifications of the flux, which induces commutator voltage. This voltage generates current which closes above the brushes and delays the commutation, this effect is called the under-commutation. The under-commutation increases the current density at the edges of the brushes which leads to the notorious brush sparking at the moment the brushes and the segment loose their touch.
Another effect may also amplify the brush sparking, the armature flux. Because of the overlay of the armature and the stator flux the 'neutral zone ' tends to adjusts itself against the turning direction of the motor. This can be compensated by changing the position of the brushes against the direction of the turning motor. But beyond the adjusted 'neutral zone', in a way a rotating voltage is created which works against the commutator voltage. If this induced voltage is anyway bigger than the commutator voltage, the resulting voltage between the commutator and the brushes aims to support the commutation - the over-commutation. Both effects can be seen at Figure 1.19 in comparison with the ideal linear commutation line.

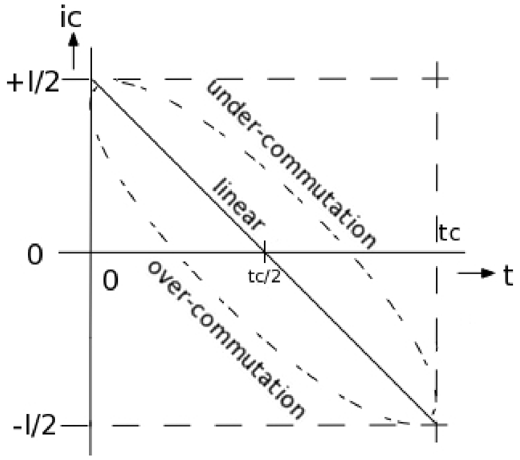

Figure 1.19: Shape of current i_c at linear, over- and under-commutation

Chapter 2

Heating, Ventilating and Air Conditioning - HVAC

2.1 General information about HVAC

In automotive sections HVAC is the umbrella term for the complete climate control of a car (see Figure 2.1[1]) including:

- AC unit
- Heating unit
- Sensors
- Flaps
- Blower
- Control panel

2.1.1 Heating and Cooling

Heating: In general automobiles are heated by the warmth of the internal combustion engine. A part of the cooling fluid is being offset after it flew through the engine block. This warmed liquid streams through the heating unit inside the climate control. The heat is carried to the passenger area by dint of a fan. The intensity, of how hot the car interior should be, is managed by different blower positions and control valves that can be controlled automatically or manually.

Cooling: The warm air is cooled down at the outside of the evaporator. Thereby a large amount of the humidity is being condensed. At the inner wall of the evaporator the coolant absorbs the heat and volatilizes at temperatures below the environmental temperature at low pressure. Within the compressor the damp of the cooling fluid is being brought up to higher pressure and the heat is dispensed to the outside air. The moist of the cooling fluid becomes liquid again and flows through the drier and the expansion valve. There its pressure and temperature are diminished and the cooling fluid flows again to the evaporator, where the circuit is closed.

The entire network of the HVAC circuit is shown in Figure 2.2.

---

[1] picture adapted from [20] page 288

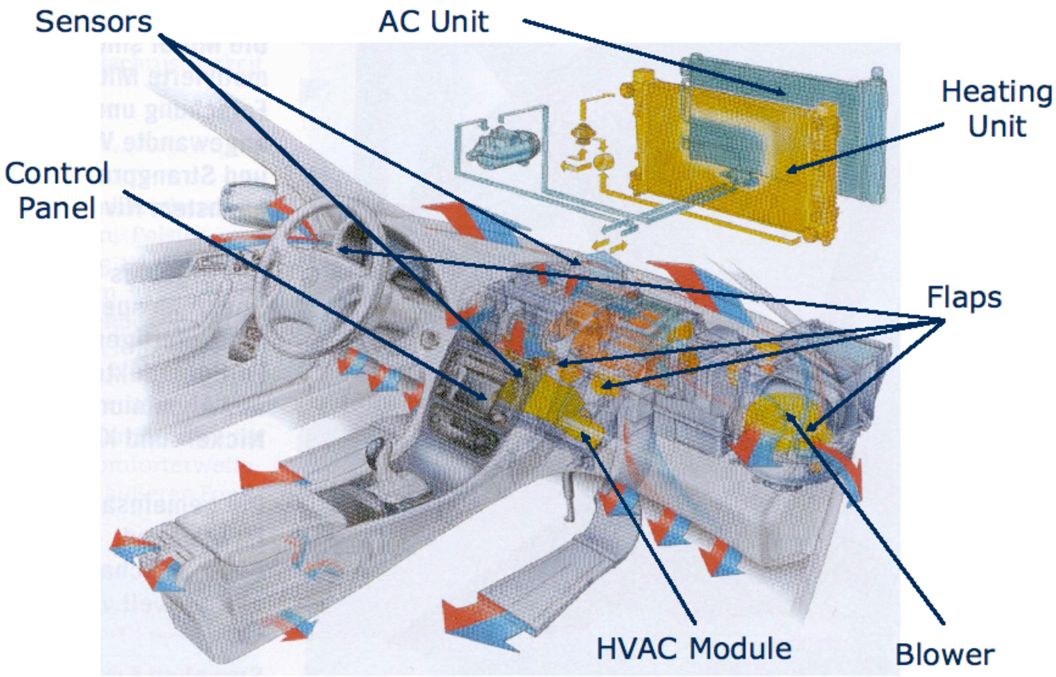

Figure 2.1: HVAC system

The heating and cooling of the passenger area is not only important just because of the comfort but also for the security on the road. There are several constraints for HVAC:

- Clear sight through the windows
- The environment should not be exhausting for the driver
- The passengers should be prevented of malodor and pollutant matter
- A comfortable climate for all passenger should be established

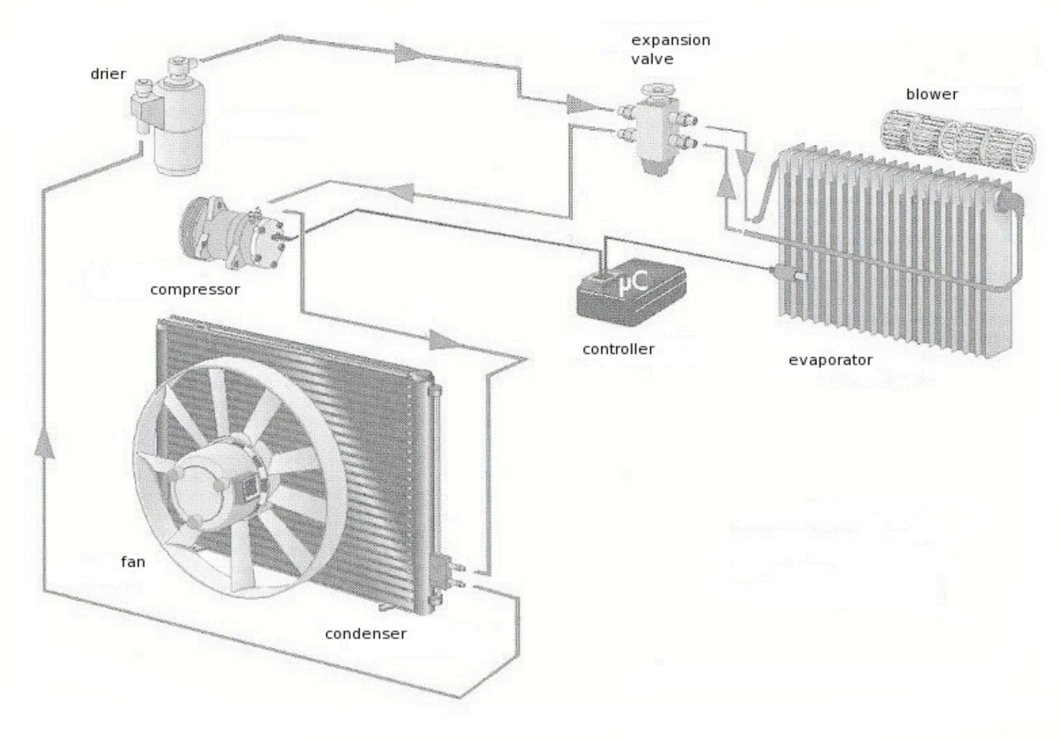

Figure 2.2: HVAC circuit

The HAVC system can be divided in three categories:

Standard (Manual) HVAC:

- manual blower / air flow control
- mechanically or electrically controlled flaps

Semi-Automatic HVAC:

- temperature regulation
- electrically controlled flaps
- manual blower / air flow control

Full Automatic HVAC:

- temperature regulation
- automatic control of all, flaps & blower
- electrically controlled blower & flaps

These systems again differ by their climate zones. There is the single-zone, the dual-zone and the four-zone climate control.
Single-zone: the whole inside of the car has one temperature
Dual-zone: the left and the right side travelers can choose between different climates
Four-zone: at this climate control the passengers have not only separate controls for left and right but also for the front and rear seats
The more climate zones there are, the more flaps and actuators are used to control the temperature. There are about 3 - 5 flaps at the single-zone, 7 - 10 within the dual-zone and 10 - 17 flaps in the four-zone

climate control. Also the four-zone climate control is only available as fully automatic system whereas the single and dual systems are available also as manual and semi-automatic designs.
It depends on the car and the company which zone climate control is installed. Usually the more expensive a car is, the more zones are integrated. The four-zone climate control with separate climate modules for the rear area can be found in cars of the luxury class, for example Audi A6/A8, BMW 7, Mercedes, Maybach, VW Phaeton . . . .

2.2 HVAC Flap Actuator

A flap actuator moves the flap in a way it is told either by manual adjustment of the passenger or the automatic climate control. It consists of:

- a DC brush motor or a stepper motor
- a feedback potentiometer of DC motor or Ripple Count
- a gearbox

The motor in Figure 2.3 is driven by the voltage that is applied at two of the connectors. If voltage is applied, the motor will begin to turn and the rotation of the rotor will drive the cogwheels. Because of their different sizes an their adjustment they will move the flap with a conversion of 672 : 1, after 672 turns of the motor the flap would have turned for 360° degrees. Hence the maximum turns of the motor at one direction should be 336, because in reality the flap would only turn maximal for 180° degrees from closed status to closed status again.

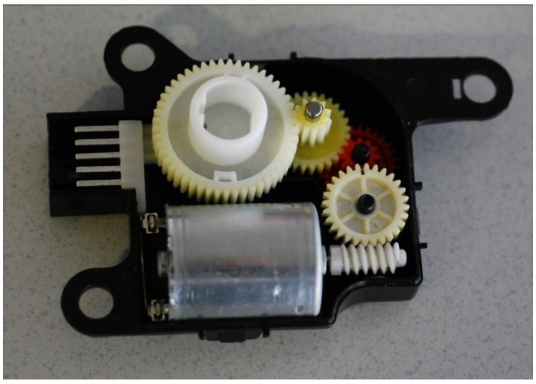

Figure 2.3: HVAC flap control

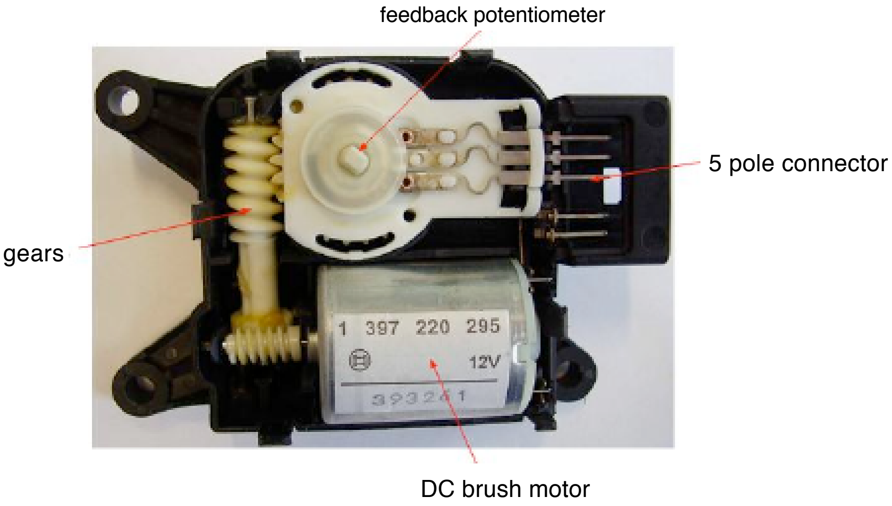

Figure 2.4: Another HVAC flap control

The other three connectors are needed for the potentiometer. As the motor turns the gears and with them the flap will move with the certain gear transmission ratio. The potentiometer lies behind the last big cogwheel which moves the flap and checks the number of turns. To see the potentiometer please have a look at Figure 2.4, which was taken of some related motor.
The flap is connected to the closed actuator on the backside of the last gear (see Figure 2.5).

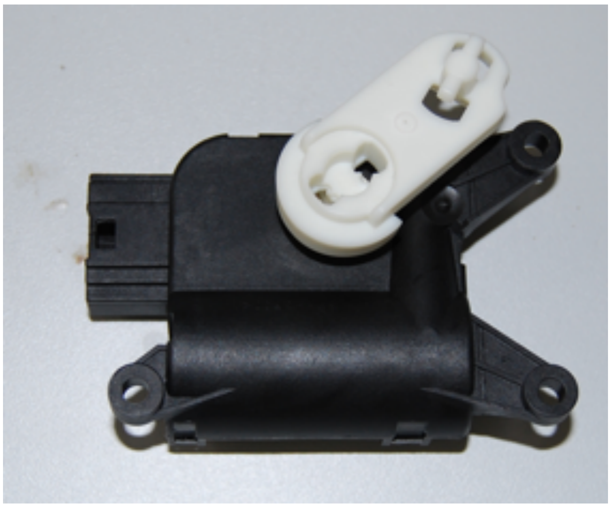

Figure 2.5: Closed HVAC flap control

Chapter 3

Operating mode - How it is done today

These days stepper motors or DC motors with either ripple counting or sensors, like potentiometers and Hall effect sensors, are used in the majority of HVAC systems. Which one of them will seize the market can not be predicted now, most likely the price will be the contributing factor .

3.1 Ripple Count

This method is based on the interpretation of the commutation current generated by the DC motor. At the turning of DC motors it is possible to detect a high frequency signal (current ripples) which is generated by the induced voltage within the motor. The frequency of the ripples depends on the torque of the motor. The ripples are an effect of the periodic changes of the effective resistance and the inductance, caused by the transition of the brushes at the commutator sections. Consequently the ripples indicate the crossing of the brushes from one commutator section to the next one and therefore they give back the angle of the anchor. The ripples are evaluated and counted, if there are x rotor windings the counted ripples per rotation will be $2 * x$, because every winding is shorted twice at one motor turn. With the help of special adaptive filters the relevant area of the motor current is sieved out to simplify and precise the detection.
Figure 3.1 shows an example of ripple counting at a miniature motor with three windings. The yellow signal shows the evaluated ripples with a reference signal in pink, which shows the time of a complete rotation of the motor. The yellow signal is composed as follows, at the first detected ripple the signal gets high and at the second one it gets low again. For six ripples, because of the three windings, there are three high states per revolution.
The reliability of this method depends on the stability of the potentiometer and other analog components in the feedback circuit. Also one critical point exists at this method, a huge change of the current feed, like the start-up process of the motor. At this moment the ripples are no longer exactly detectable and therefore the torque can not be measured correctly.
In Figure 3.2 the block diagram shows the details, of how a ripple count method can be implemented.

Figure 3.1: Example of an Ripple Count evaluation

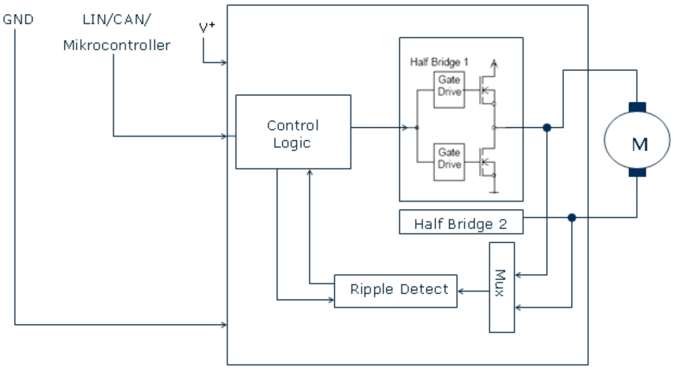

Figure 3.2: Ripple Count

3.2 Potentiometer sensor

In general a potentiometer is an electrical resistance whose resistance value changes by mechanical means, a so called Rheostat. If the potentiometer is connected as a voltage divider it works as a potentiometer sensor. It consists of resistance material, which is applied at a non-electroconductive carrier, two connectors, one at each side of the resistance and a sliding contact, which electrically divides the firm resistance into two resistances.

At potentiometer sensors with a round design the angle is being measured. According to the position of the sliding contact the voltage changes proportionally. If the sensor is calibrated it is possible to determine the angle out of the voltage change.

This kind of sensor is the cheapest method of distance (stretched design) or angle measurement. It is also very simple, because of no electronic needs, its interference potential is very high, it has a wide operating temperature ($< 250^\circ$) and measurement range (360°). However there are also many disadvantages mechanical wear by abrasion, measurement errors by relicts of the abrasion, complex tests, limited miniaturization and noise.

3.3 Hall effect sensor

This sensor is a member of magnetostatic sensors. The Hall effect is being evaluated by the help of thin semiconductor plates. If such a current-carrying plate is vertically interspersed by a magnetic induction B, the Lorentz force takes effect (see Figure 3.3[1]). The charge carriers are deflected perpendicular to the field B and the current I. The Hall voltage U_H can be measured at two opposed points of the plate, transverse the direction of the current.

$$U_H = R_H * I * \frac{B}{d} \tag{3.1}$$

R_H … Hall coefficient, material constant
I … current
B … magnetic induction
d … thickness of the plate

Advantages of Hall sensors are that they are easier to miniaturize, they provide a signal voltage which is independent of the torque and therefore they are able to detect also slow rotations, also they provide a rectangular signal which can be analyzed directly by any controller.

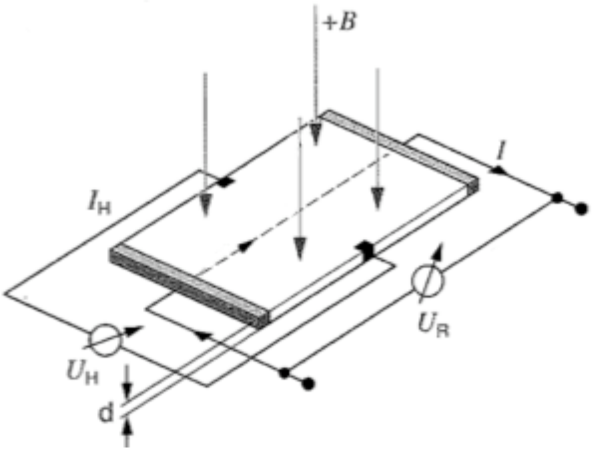

Figure 3.3: Hall effect

---

[1] picture adapted from [14] page 240

3.3.1 Stepper motor

Stepper motors do not require analog feedback control systems as some of the other motors do, so no feedback potentiometer or Hall effect sensor is needed.
The stepper motor is a synchronous motor with a rotor and a stator. The rotor is being turned by electromagnets surrounding it and a micro controller energizing them in a way which turns the rotor precisely the specified angle. It is possible to access every angle of rotation step by step, if it is a multiple of the minimal possible rotation angle (see Figure 3.4[2]).
The angle of the steps depends on the geometry of the motor. Usually the minimum of pole pairs is 100 so that very small steps up to 0.1 degree are possible.
More information about stepper motors can be found at chapter 1.1.3.

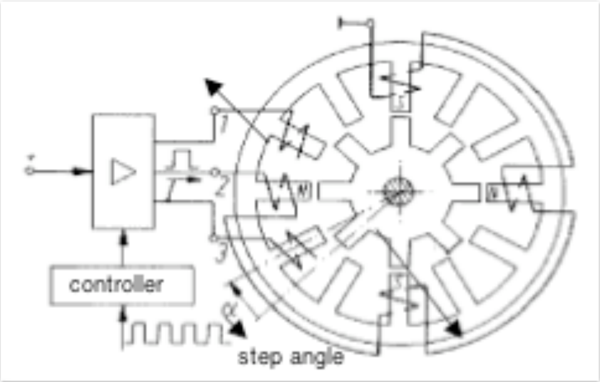

Figure 3.4: Stepper motor

---

[2] picture adapted from [8] page 357

Chapter 4

Developed method

4.1 First steps

As already mentioned above the subject of this thesis was to find a way to measure the torque of a DC motor without any additional sensor. The intentions are to reduce costs, the loss of weight and the drop-out because of a broken sensor. Therefore we will have a closer look at the signals of the motor, as there are current, voltage and the magnetic field.

The first approaches were to analyze the shape of the different signals with an oscilloscope and to look if they hold information about the revolution speed. For that reason a special circuit had to be created and designed (see Figure 4.1). The motor is being driven by a circuit with a half bridge driver, the Dual-Half-Bridge-Driver TLE 4207 G from Infineon, which is a special chip for automotive and industrial motion control applications.

The circuit is just a basic buildup which enables the motor to run for- or backwards. In the case In1 and In2 are different from each other the motor will run, if they both are 0 or 1 at the same time, it will stop. If Inh, which means Inhibit, is 0 the system is on standby (see Figure 4.2).

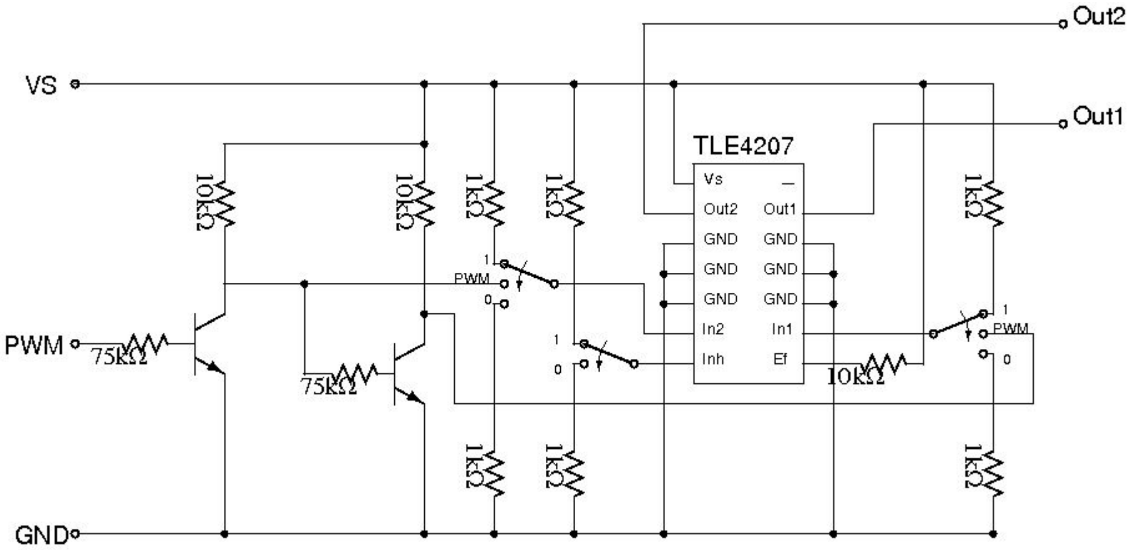

Figure 4.1: Circuit with half bridge to run motor

The motors used are: a simple miniature DC motor, the Mabuchi 478.254 (see Figure 4.3), and a DC motor from VW, which is standard for this application, shown at Figure 4.4. The VW motor from South

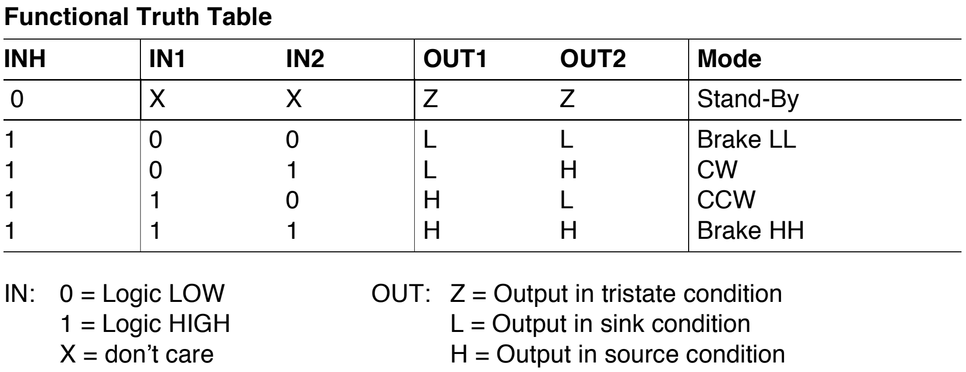

Functional Truth Table

INH	IN1	IN2	OUT1	OUT2	Mode
0	X	X	Z	Z	Stand-By
1	0	0	L	L	Brake LL
1	0	1	L	H	CW
1	1	0	H	L	CCW
1	1	1	H	H	Brake HH

IN: 0 = Logic LOW
1 = Logic HIGH
X = don't care

OUT: Z = Output in tristate condition
L = Output in sink condition
H = Output in source condition

Figure 4.2: Functional truth table of the TLE 4207 G

Korea has a gear ratio of 672:1, which means if the rotor turns 672 times the attached flap would turn for 360°. The other motor was used as comparison, to see if there are different behaviors and to verify that our method works not only with just one special motor.

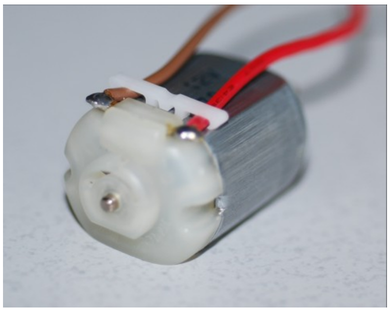

Figure 4.3: Mabuchi motor

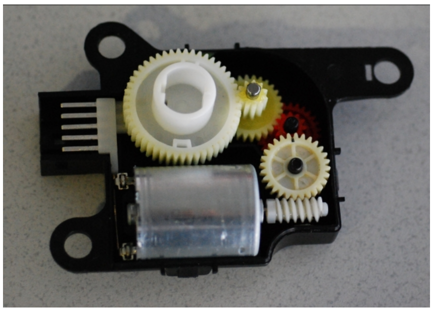

Figure 4.4: Standard VW motor

To assure that the measured data is correct a light barrier was included at the set-up. It was used within a special build-up, seen in Figure 4.5. A circular shape made of plastic was attached to a rotor in a way that it would run within the light barrier. In order to prove every round the rotor turns, a hole was drilled into the plastic disc so that the emitted light can be detetected by the sensor.

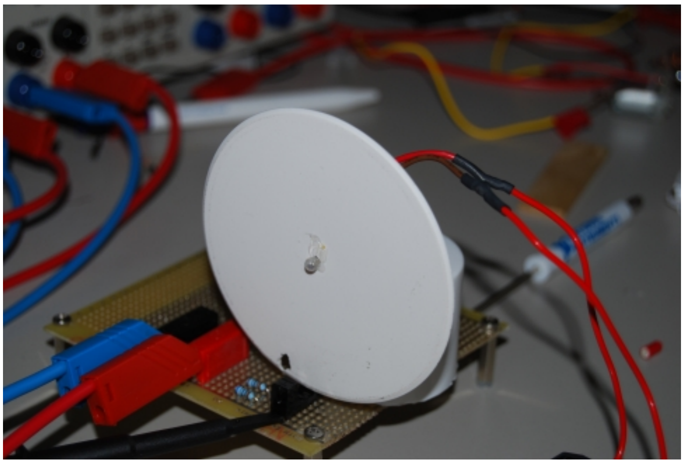

Figure 4.5: Light barrier build-up

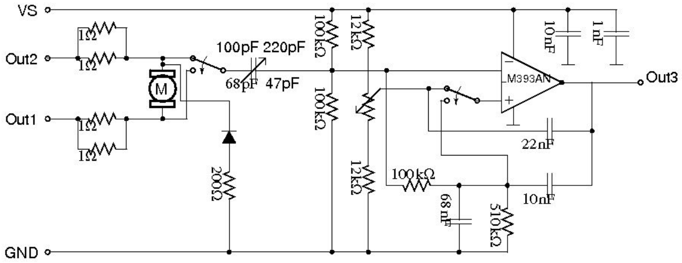

Figure 4.6: Invented circuit for Ripple Count measuring

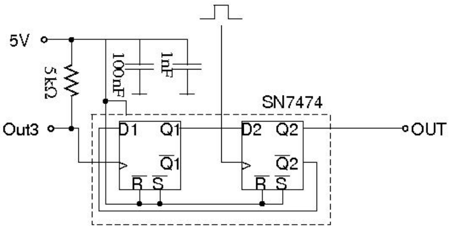

Figure 4.7: Output register

4.2 Different approaches

For detecting a new measurement it was necessary to gain information about the motor. As a basis we reimplemented an already known measurement method, the Ripple Count. From this we moved on to the direct measurement of the current and an evaluation of a method including a diode.

Ripple Count

How this measurement works was described before, in Section 3.1. Based on the known facts about the Ripple Count method, a setup was implemented to obtain a ripple output (see Figure 4.6 and Figure 4.7). By means of the comparator LM393AN the output of the motor was checked and for every spike, which deviates from normal variations, the comparator output changed quickly to value null (see Figure 4.8). At this diagram the purple signal shows the output of the comparator and the green one illustrates the signal after it was transformed by the SN7474. This device consists of two independent D-type flip-flops, which react to the positive edges of the signal Out3. In Figure 4.8 we see very clearly that, after a short delay time, the green signal changes right after the comparator signal gets high again.

This is one way to create ripples. From this moment on it is easy to count them and therefore determine the angle of the flap, or to give clear instructions to the controller to move the flap by an angle or for an exact amount of ripples.

Current measurement

This gauging was done with the aid of a clamp-on amperemeter. After it was fitted to one of the motor wires the current signal could be watched at the oscilloscope. At the driven motor some load was applied by manually breaking or even stopping it, expectedly the more load was applied

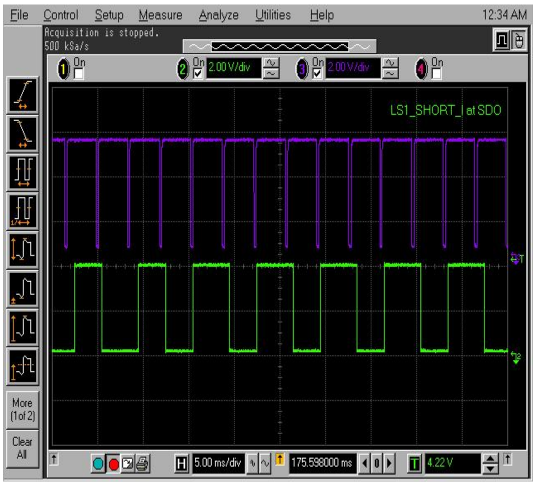

Acquisition is stopped.
500 kSa/s

Figure 4.8: Output of Ripple Count method

the more current consumption took effect.

The reason for the higher consumption of energy is the fact that if the rotor is slow-going the voltage, which is induced within the windings, decreases and therefore the current flow rises. The motor is able to ingest more power and to perform more mechanical work.

$$U = U_i + R_a * I \qquad (4.1)$$

U … impressed voltage at the armature
U_i … induced voltage within the armature
R_a … ohmic resistance of the armature
I … armature current

The following values were measured by an oscilloscope at different modes of operation:

- normal motor operation - 32 mA
- decelerated mode - 170 mA
- stopped motor - 300 mA

The above mentioned operating performances can be seen in the following Figures 4.9, 4.10 and 4.11. At this pictures the red signal shows the light barrier, marking every round the motor turns, the yellow signal is the output from the Ripple Count measurement and the green signal finally shows the motor current. Unfortunately Figure 4.11 does not exactly show the signals of the stopped motor but a few moments before the final stop. This is a consequence of the missing signals at the motor stop. No more signals arrive at the oscilloscope and so it gets no trigger pulse.

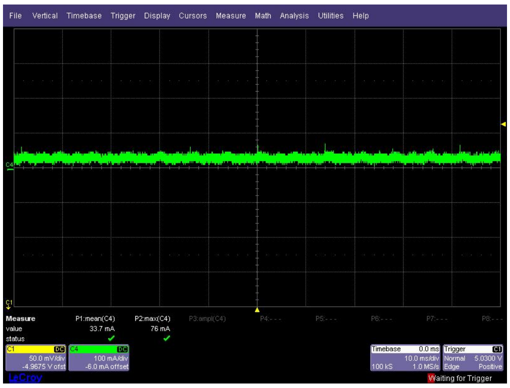

Measure	P1:mean(C4)	P2:max(C4)	P3:ampl(C4)	P4:- - -	P5:- - -	P6:- - -	P7:- - -	P8:- - -
value	33.7 mA	76 mA						
status	✓	✓						

C1 DC 50.0 mV/div -4.9675 V ofst
C4 DC 100 mA/div -6.0 mA offset
Timebase 0.0 ms 10.0 ms/div 100 kS 1.0 MS/s
Trigger C1 Normal 5.0300 V Edge Positive
Waiting for Trigger

Figure 4.9: Motor at normal operation

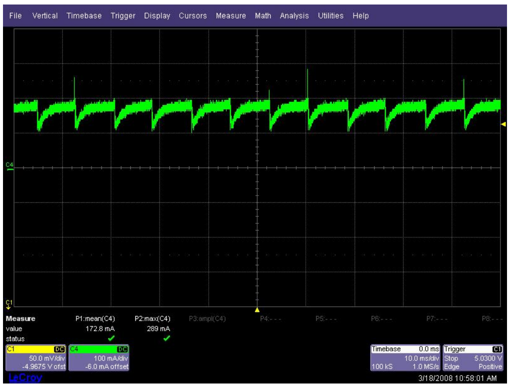

Measure	P1:mean(C4)	P2:max(C4)	P3:ampl(C4)	P4:- - -	P5:- - -	P6:- - -	P7:- - -	P8:- - -
value	172.8 mA	289 mA						
status	✓	✓						

C1 DC 50.0 mV/div -4.9675 V ofst
C4 DC 100 mA/div -6.0 mA offset
Timebase 0.0 ms 10.0 ms/div 100 kS 1.0 MS/s
Trigger C1 Stop 5.0300 V Edge Positive
3/18/2008 10:58:01 AM

Figure 4.10: Decelerated motor

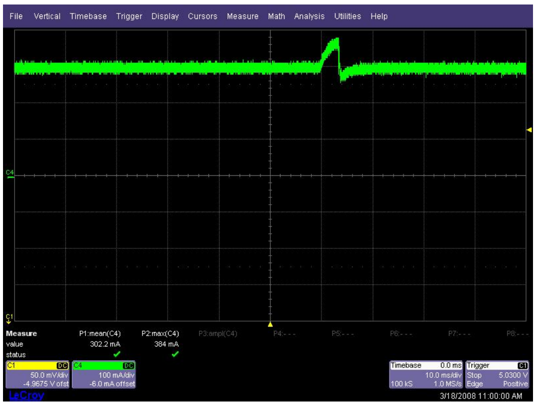

Measure	P1:mean(C4)	P2:max(C4)	P3:ampl(C4)	P4:- - -	P5:- - -	P6:- - -	P7:- - -	P8:- - -
value	302.2 mA	384 mA						
status	✓	✓						

C1 DC 50.0 mV/div -4.9675 V ofst
C4 DC 100 mA/div -6.0 mA offset
Timebase 0.0 ms 10.0 ms/div 100 kS 1.0 MS/s
Trigger C1 Stop 5.0300 V Edge Positive
3/18/2008 11:00:00 AM

Figure 4.11: The stopped motor

Measurement of the commutation by a diode

This measurement was implemented with PWM (pulse-width modulation). PWM provides power which switches between on and off steadily and therefore en- and disables the motor as long as energy is provided.

In Figure 4.6 we see a recovery diode connected right to the motor. This diode was meant to show the commutations of the motor every time it was turned off. This expectation was based on the following facts:

Each time the rotor turns for more than a half round the current within the conductors has to be switched every time the rotor passes the 'neutral zone' at 180° degrees. The current changes its sign exactly at the moment the conductor section, dedicated to the conductor loop, passes the brushes. According to the great current change $\frac{\Delta i}{\Delta t}$ a voltage surge occurs within the winding:

$$U = L * \frac{\Delta i}{\Delta t}. \tag{4.2}$$

As told above the measurement takes place at the moment the motor is switched off by the PWM supply. Hence to the inertia the motor is still running, slowing down because of the diminishing power, but still running. Therefore also commutations take place, which additionally decrease the fading voltage. So the assumption was that the diode setup would provide a signal as in Diagram 4.12, within the red circles we see the voltage drop, caused by the commutations. In reality we gained the yellow signal in Figure 4.13, the green signal shows the Ripple Count and the red one every revolution. This signal was much too small to work with and at the second motor we could not even figure out a suitable signal because of its diminutiveness.

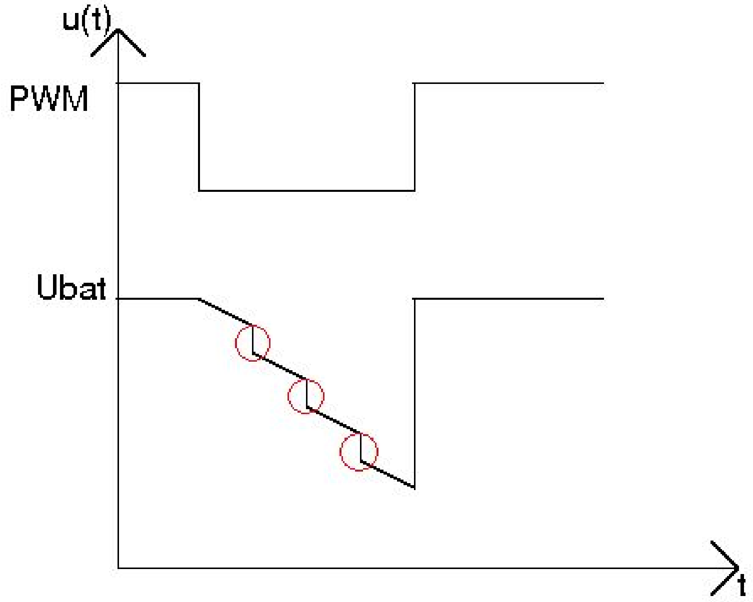

Figure 4.12: Expected signal with the recovery diode

4.3 Detection

After the three methods mentioned above we become aware that it was not possible to puzzle a complete new method by directly measuring current and voltage. An alternative procedure with a new approach had to be created in order to detect the torque of the motor. The first specification we established was that it seemed to be most efficient to catch the number commutations and calculate the torque.

After the measurement setup with the recovery diode a closer look at the theory showed the potential of generating a complete new technique out of Lenz's law and inductivity.

Lenz's law:

A voltage, induced within a conductor loop by the change of a magnetic flux, causes a current flow which generates a magnetic field. This field is directed in a way it counters the change of the magnetic flux, which can also result in force effects, like the Lorentz force (see paragraph 1.1).

Inductivity:

Inductivity is the skill of a current carrying conductor to generate a magnetic field because of current change. The created field is directed in a way to negate the alteration of the current. The definition of inductivity is:

$L = \frac{d\Phi}{dI}.$

L … inductance
Φ … magnetic flux through the area
I … current

At every commutation within the motor the sign of the current is switched inside the conductor loop in a way the motor does not stop because of the 'neutral zone'. As the direction of the current changes also the magnetic field alters and due to that fact, following Lenz's law, that voltage is induced within the

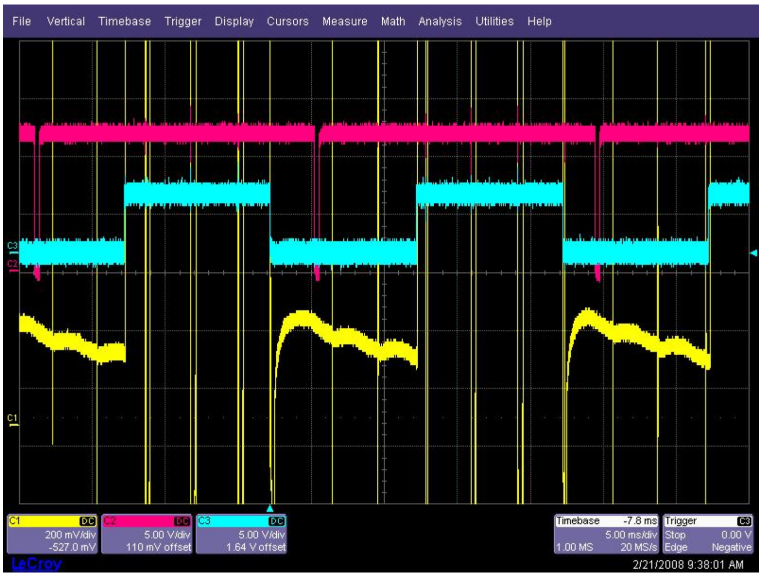

C1 DC 200 mV/div -527.0 mV
C2 DC 5.00 V/div 110 mV offset
C3 DC 5.00 V/div 1.64 V offset
Timebase -7.8 ms 5.00 ms/div 1.00 MS 20 MS/s
Trigger C3 Stop 0.00 V Edge Negative
2/21/2008 9:38:01 AM

Figure 4.13: Actual measurement result

windings. This voltage is also called back electromotive force (back emf) and it is directed in a way it negates the change of the magnetic field. With the knowledge about this voltage and the inductivity the next step was to put a coil right onto the motor. This coil should be able to detect the fluctuations of the magnetic field inside the motor and therefore voltage would be generated right within the coil. The hope was that now every commutation, the cause for the changes of the field, could be visible and observed.
To prove this theoretical idea different air-core coils were created by hand (see Figure 4.14). In Figure we also see the coil more in detail. This special coil has exactly five windings, whereas many coils with varying numbers of windings were created, from one up to five. The coils were made out of isolated wires, the two endings were soldered to a connector and the coil was created by wrapping a spiral with an air core as small as possible. Also coils which differ from their span between the coil and the connector were created, furthermore models with and without twisted endings and coils with a bigger air core.

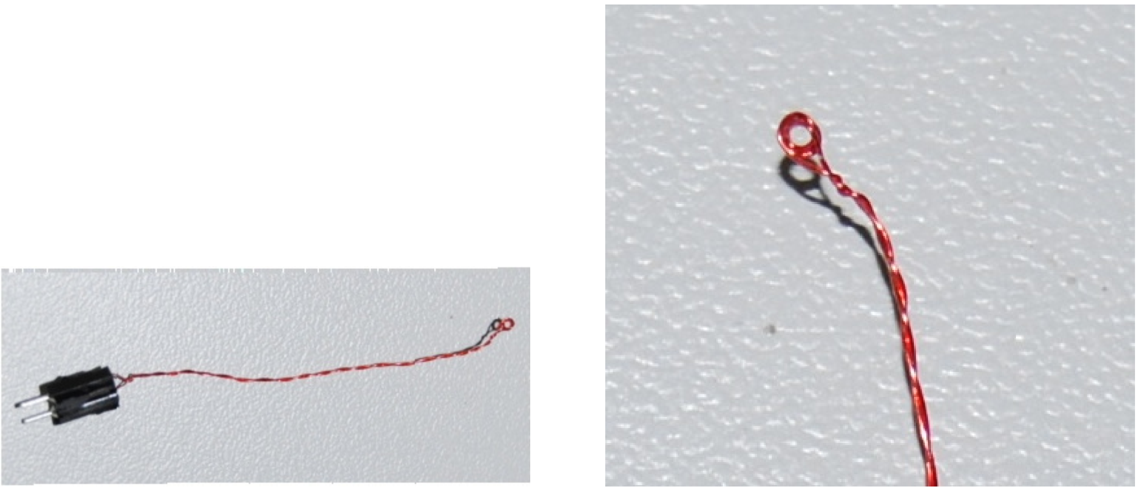

(a) A handmade air-core coil

(b) A closer look at the coil

Figure 4.14: The selfmade coils

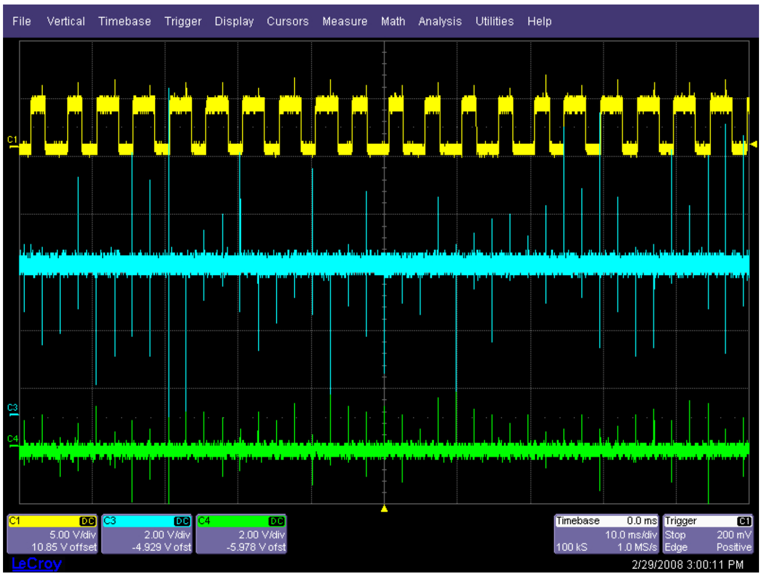

Figure 4.15: Output from coil at the Mabuchi and a standard motor

After some theoretical thoughts and first tests it became clear that the coils without twisted endings were useless, they detect every little disturbance and amplify it because the two feed wires interact by their magnetic fields. If the wires are twisted, the fields should cancel each other. Also it would be preferable to use very short feeds to cut down the possible disturbances. At this point some compromises had to be made between the shortest length possible and the ability to place the coil at the motor.
Since the coils were very small it was not possible to figure out a difference between the results at this scale of measuring. It was not feasible to distinguish them, neither the coils with a varying amount of windings, nor the ones with bigger air cores. As an example at Figures 4.16, 4.17, 4.18, 4.19 and 4.20 we see coils from one winding up to five. By changing the placement of the coil the result would change slightly but no characterization could be assigned surely to one specific coil.

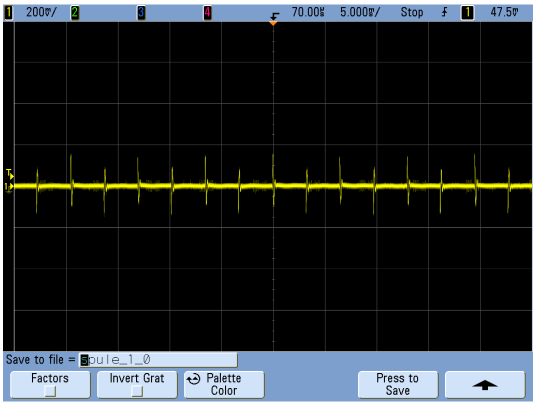

Figure 4.16: Coil with one winding

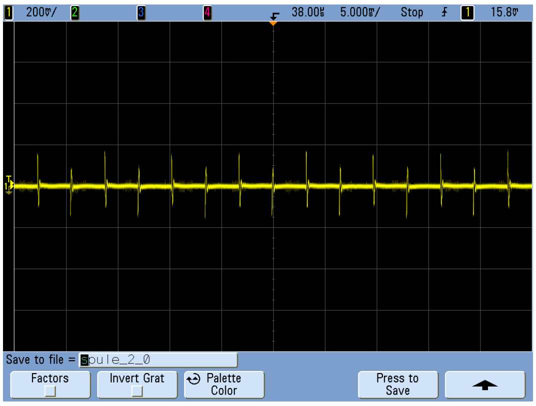

Figure 4.17: Coil with two windings

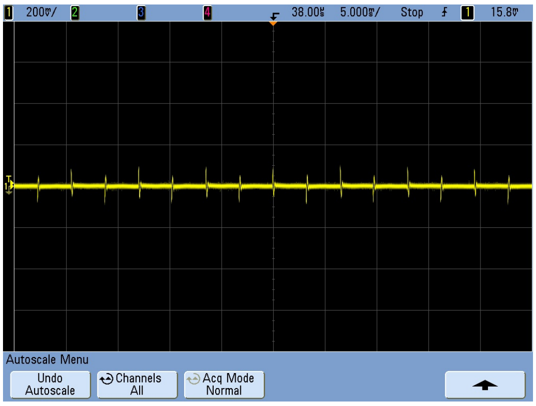

Figure 4.18: Coil with three windings

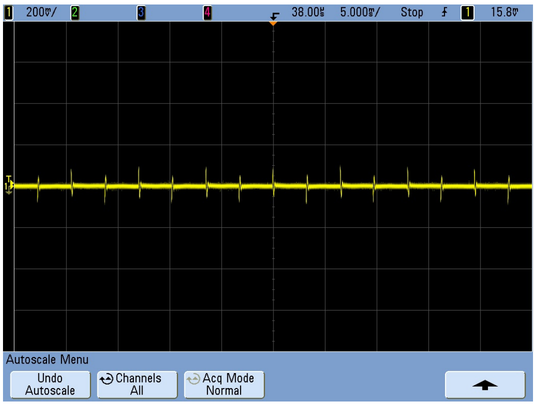

Figure 4.19: Coil with four windings

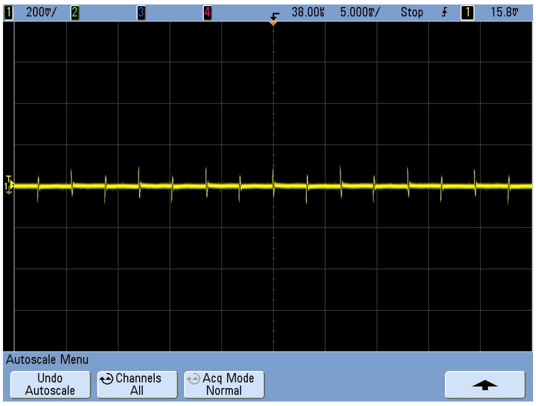

Figure 4.20: Coil with five windings

To prove this finding we checked the inductances of the coils too, based on the spotted facts they should be quite the same. The LCR analyzer corroborated this expectations, the values of the handmade inductances lie between 36 to 47 nH.

The coils were placed at the two motors while the output was watched at the oscilloscope. The signal was as expected, one spike per commutation alternately positive or negative, depending on how the magnetic field had changed. This output was proved by using the Ripple Count method additionally and watching both outputs at the same time. As we got a clear and powerful result at the Mabuchi motor, the outcome of the coil at the standard motor was much smaller and less intense (see Figure 4.15). At this figure the yellow signal shows the Ripple Count output, the blue one is the voltage induced by a coil at the Mabuchi motor, whereas the green signal is from an equal coil at the standard motor. Standardized DC motors used within the flap actuators seem to be shielded much better. Nevertheless there was a signal that could be interpreted and it seemed to be possible to work with.

Now that we had figured out the method to detect the commutations, it was time to think about implementing this procedure on a microchip.

Chapter 5

Chip

5.1 Designing issues

Owing to the discoveries with the hand made air-core coils it was now time to think about how this method could be realized on a chip. The target was to detect the commutations of the motor with the aid of coils and enlarge the signal, so that the output would be big enough to work further along with it.
What components will be needed, how they should be adjusted, how many space will be there and how many coils will be used?
The primary issues which should be considered are: the chip should be as cheap and simple as possible, because if not, there would be no real improvement to the present solutions. And without any change to the better no customer would ever consider to use this method.
First of all we had to decide how the measurement setup within the chip should exactly work and how it should be designed so that the output will be at some shape we could process further on. Due to the simple and cheap condition the final decision was to use only some coils and corresponding amplifiers. The goal was to make the detected spikes countable by some external measurement setup and evaluate them on an FPGA (Field Programmable Gate Array) board. For simplified interpretation it seemed to be most efficient to, once again, use the ripple form, two spikes would make one ripple. With this setup it should be possible to tell the motor the exact amount of rotations it should turn.
After some thoughts we came to the conclusion to put three coils and three amplifiers on the chip, for the reason of obtaining and evaluating different behaviors according to the position, respectively the special adjustment, of the coils. All coils will have the same amount of windings but vary by the size and their arrangement of the windings. Two of the coils will have the same size but with inversely arranged windings and they will be placed directly side by side in the middle of the chip, whereas the third one will be winded just along the edges of the chip, surrounding the other two coils. To have a picture in mind, have a look at Figure 5.1. The blue dashed line symbolizes the chip, within we see the big coil and the two smaller ones in the middle. All of the coils will have ten windings, because of the higher inductance we looked forward to create and enough existing space.

The intention was that the two smaller coils could be used to eliminate interferences of the environment, because they are connected in reverse series. Their output voltage will remove any interference voltages as long as the magnetic fields of both coils are affected the same way. The commutation will reach one of the coils earlier than the other, because of their position side by side, therefore this induced voltage should not be annihilated. The third coil, the big one, will be used as an comparison, to see if size really matters. The coils will each have an amplifier connected to increase the output signal. Based on these informations we could start the creating of the chip.

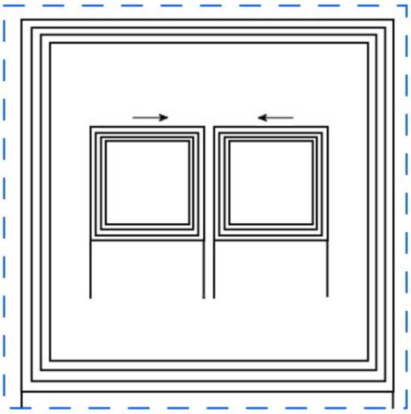

Figure 5.1: Diagram of the coils placement on the chip

5.2 Simulation

To assure that the designed chip would not just work in theory but also in reality, we created a circuit which imitates the voltage output of a coil placed at a running motor. With this signal we are able to test the simulated amplifiers and see if the setup works as expected.
First we had to take a detailed look at the output of the handmade air coils to be able to imitate their result. The coil signal itself is shown at Figure 5.2. The yellow signal is the output from a coil placed on a standard motor and the green one shows the output form a coil at the top of the Mabuchi motor. What may not automatically catch the readers eye is that the Mabuchi signal is much bigger than the output of the standard motor. At this screenshot the oscilloscope has two different resolutions, 5 mV per division at the standard motor inlet and 20 mV per division at the Mabuchi one. At the bottom of the picture we also see that the peak to peak voltage of the Mabuchi is more than four times bigger than the one of the standard motor, 67.5 mV to 13.63 mV.

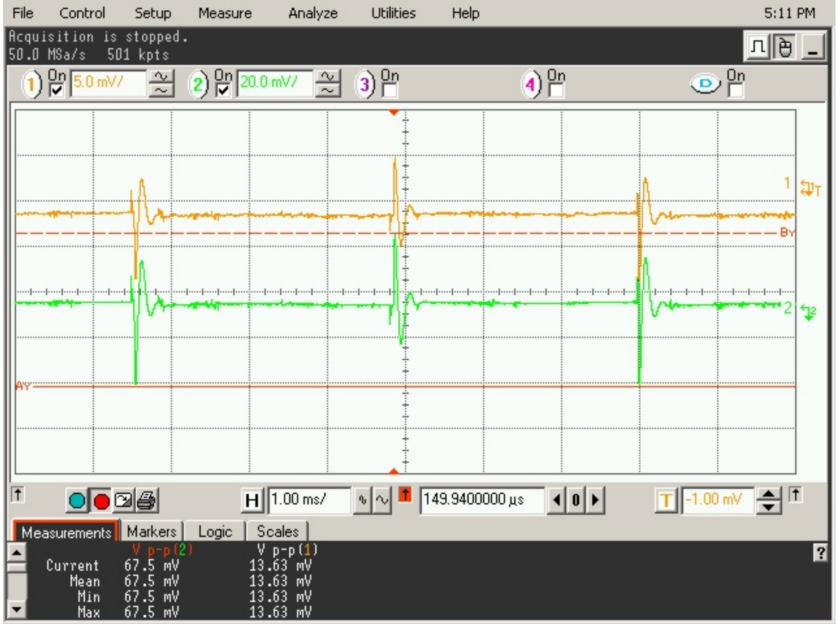

```
Acquisition is stopped.
50.0 MSa/s   501 kpts
```

```
              V p-p(2)        V p-p(1)
   Current    67.5 mV         13.63 mV
      Mean    67.5 mV         13.63 mV
       Min    67.5 mV         13.63 mV
       Max    67.5 mV         13.63 mV
```

Figure 5.2: Output signal of the hand made air-core coils

After watching the output of the two coils very closely it came clear that both signals are perfectly the same, except for their amplitude. The zoomed signal can be broken down into three parts (see Figure 5.3). The first one, which lasts 51 μs, is caused by the little short the associated windings run through at every commutation. After this time we see the induced voltage and how it is suppressed. From the moment of the first spike to its minimum, it takes 90 μs and 177 μs from this point till the voltage is at its starting point again.

So the time amount of one spike and its oscillation ringing is 308 μs. Based on this observation and the information that the induced voltage is approximately 10 mV to 50 mV, which was determined to the value of 30 mV for the simulation, the circuit was assembled with the help of Cadence.

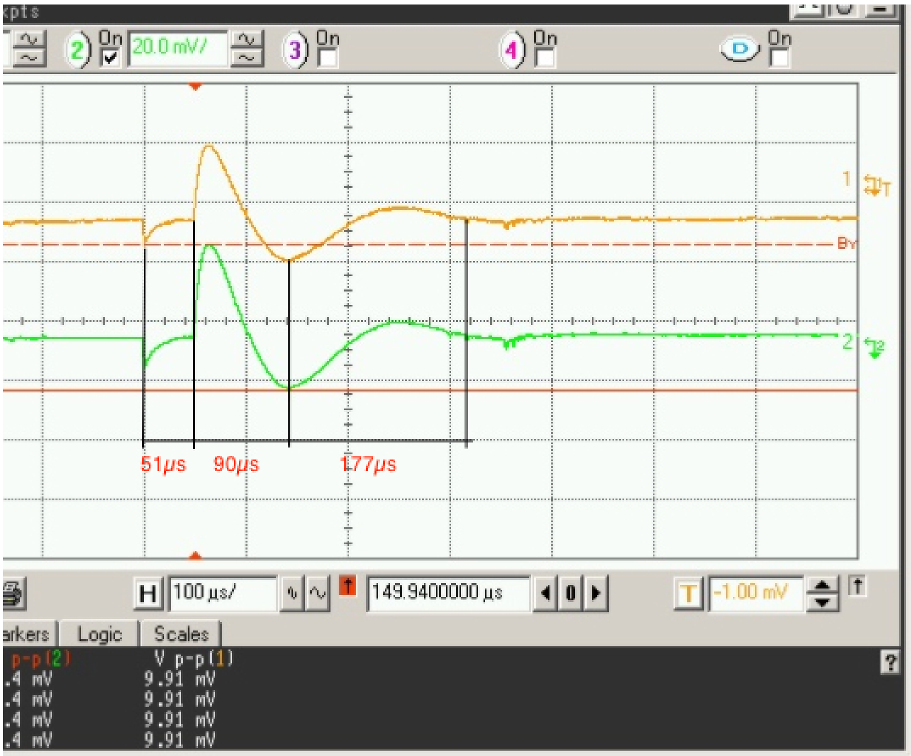

```
p-p(2)     V p-p(1)
.4 mV      9.91 mV
.4 mV      9.91 mV
.4 mV      9.91 mV
.4 mV      9.91 mV
```

Figure 5.3: Time split output

Because of the form of the signal it was decided to create a RLC circuit and adapt the values of the components till the output fits the given signal. According to the positive and negative amplitude we needed two pulse generators, an oscillating circuit, to generate the oscillation ringing after the spike, a Voltage Controlled Voltage Source (VCVS), a resistor and of course a coil. The RLC circuit was specified by assigning the value 1 to the inductance L_1 and adjust the values of the resistance and the capacitance. This was done by the Thomson equation which calculates the circuit oscillation frequency.

$$f_0 = \frac{1}{2\pi\sqrt{LC}} \tag{5.1}$$

f_0 … circuit oscillation frequency
L … inductance
C … capacitance

As mentioned above we found that the elapsed time of the commutation response by the handmade air coils takes 308 μs. As the inductance L_1 is presumed as 1 Henry just one unknown constant is left, the capacitance C.

$$T = 308\,\mu s$$
$$f_0 = \frac{1}{T} = 5555.\overline{5}\,Hz$$
$$C = \left(\frac{1}{2\pi\,f_0}\right)^2$$
$$C = 820\,pF$$

Now we know every parameter value we need, the value of R is redundant and won't change the outcome. This is based on the fact that the oscillating circuit is connected in series, so if we form the equation for the conductance:
$Z = R + jwL + 1/jwC$,
we see that R has no imaginary part. Yet if the resistor would have a real and an imaginary part within the formula there would be a change of the resonance frequency. This would be the case if the circuit was parallel connected. As this does not fit our case, we fixed the value of R to be 30 kΩ. Therefore the final values for the oscillating circuit are L_1 = 1 H, C = 820 pF and R = 30 kΩ.
The value of the coil L_0 was determined by measuring the inductivity of the handmade air-coils with two LCR analyzers and determine the mean value out of this measuring. We also tried to figure out the inductivity by calculating it:

$$L = 1nH * n^2 * \frac{D^2}{l} \tag{5.2}$$

L … inductance [H]
n … number of coil windings
D … diameter [mm^2]
l … length [mm]

One of the handmade coils with 5 windings, a diameter of 1 mm^2 and a length of 0.5 mm^2, was taken to calculate the value of the inductance:

$$L = 25\,nH * \frac{1}{0,5} = 50\,nH$$

This result came quite near the results of the LCR analyzers, which said that the coils with 5 windings have an inductance of 47 nH. The span of the results measured by the LCR meter lay between 36 nH and 47 nH, for coils with one winding up to the coils with 5 windings. Based on this results L_0 got specified with 40 nH.
The pulse generators alternatingly deliver a square waveform, each of them has a period of 6 ms but the negative generator has a delay of 3 ms, so that every 3 ms there is a pulse either positive or negative. The positive pulse has a maximum voltage of 30 mV, whereas the negative pulse has its maximum at -35 mV. After some time of testing we achieved a signal which satisfied our specifications and came very close to the basic signal. For the final circuit see Figure 5.4 and the output signal is shown in Figure 5.5.

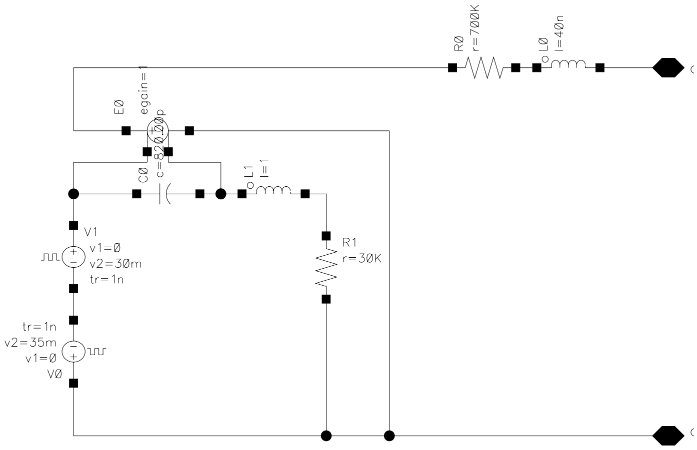

Figure 5.4: Circuit to simulate the coil output

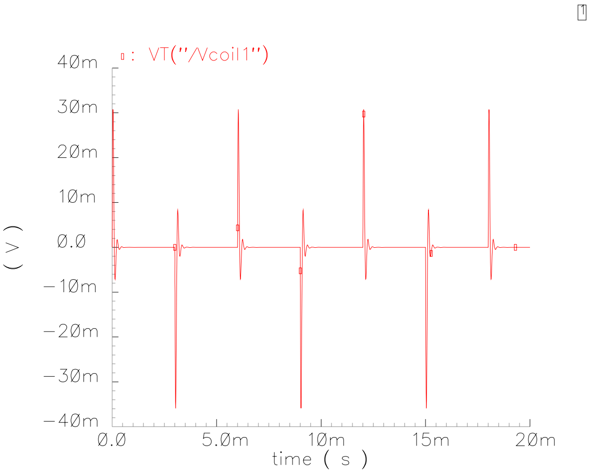

Figure 5.5: The generated output to simulate the output of a coil on a motor

Now that the given input was reverse engineered we were able to take the next steps, amplify the output and transform it with the help of comparators. To be able to use the output further along it had to be scaled up. Because of terms like time and cost we decided to work with an already existing amplifier. After spending some time searching for a matching amplifier which fulfills all of our needs we choose one from a former project and adapted it. This adaption was taken by adjusting its gain through customizing its resistances. Therefore we needed to connect the resistors like in Figure 5.6.

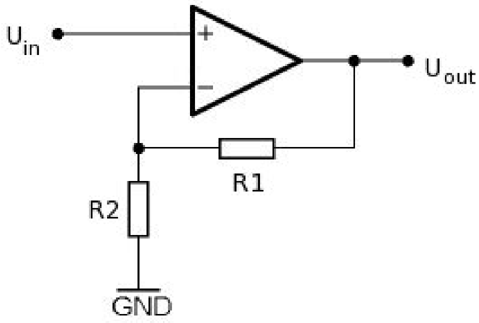

Figure 5.6: Non-inverting amplifier

Next we had to decide with which amount of gain we want to get our output amplified. To have a direct comparison we connected each of our three motor models with their coils to one amplifier. The amplifiers were configured in a way they have different gain settings., which was achieved by varying the values of the resistors, so that special amplifications were obtained. The amplification is calculated using the following formula:

$$A = \frac{R_1 + R_2}{R_2} \qquad \Rightarrow \qquad A = 1 + \frac{R_1}{R_2} \tag{5.3}$$

The different gains were:

- A = 2 with R_1 = 19.5 kΩ and R_2 = 19.5 kΩ
- A = 40 with R_1 = 19.5 kΩ and R_2 = 500 Ω
- A = 100 with R_1 = 19.5 kΩ and R_2 = 196 Ω

The resulting signals are shown in Figure 5.7. It is easy to distinguish the different amplifications. The gain of two has no real use for our further work because it is too small, but gain 40 and 100 seemed to be worth to have a closer look on. This closer look implicated testing the amplifier at this two gain levels, how it would work at different settings. Hereby we soon discovered that at high temperatures (150° C) the amplifier with gain of 100 does not work like expected. Now the decision was clear, since the resulting voltage is big enough to use it for further adaption. We decided to implement the amplifiers with a gain of 40.

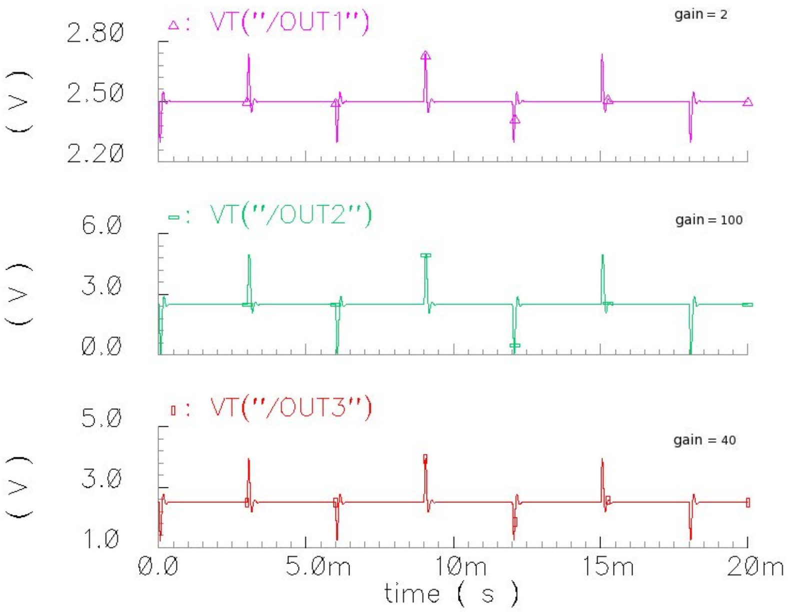

Figure 5.7: Differently amplified coil signals

5.3 Layout

With the finished parameterization the chip was ready for the layout. The result is shown at the next few pictures, where the chip will be explained layer by layer.
Figure 5.8 shows the top layer of the chip with its pin assignments.

- **DIS 1 - 3** is an input of the amplifier, it is set to ground
- **IPL_100u** the current input of the amplifier with, as said within the title, 100 μA
- **INN 1 - 3** voltage input of the amplifier, 2.5 V
- **VCM 1 - 3** common mode voltage, 2.5 V
- **GND** ground, or also called reference potential
- **VDD** power supply of the amplifier, 5 V
- **OUT 1 - 3** output signal from the amplifier

So the chip will have 12 inputs, 3 outputs and needs to be supplied with 2.5 V, 5 V, a ground signal and 100 μA .

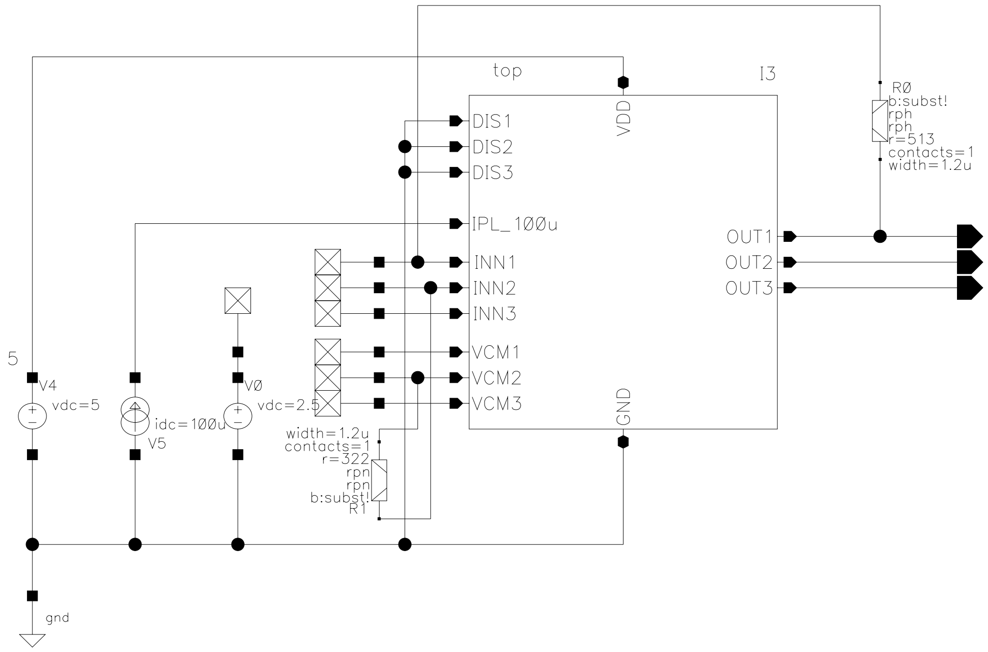

Figure 5.8: The top layer of the chip with its inputs and outputs

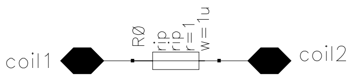

Figure 5.9: Equivalent circuit of the coil

The next Figure 5.9 shows the equivalent circuit diagram of the coil with its pin with whom it is connected to the amplifier. How his looks like is displayed in Figure 5.10.
This picture shows just one third of this level, because of the better view we have by just examining this part of the whole figure. To see how the complete diagram looks like please have a look at A.4. Except for the current mirror at this figure the other parts are just the same.
At the left hand we see the inputs already discussed with some protective resistors. IPL_100u leads directly into the current mirror where it is split up into three signals (INL_10u_OUT1, INL_10u_OUT2, INL_10u_OUT3), each with 10 μA to supply the amplifier. Above the current mirror we see the equivalent circuit diagram of the coil with an mpad at its right side. A mpad is some kind of mini pad which makes it possible to measure the direct values of this location with a thin and special needle adapter. The output of the coil is named INP and leads straight ahead into the amplifier which will increase the signal and provide it at OUTP, respectively OUT3.
So there is just one interesting block left to examine, the amplifier at Figure 5.11.

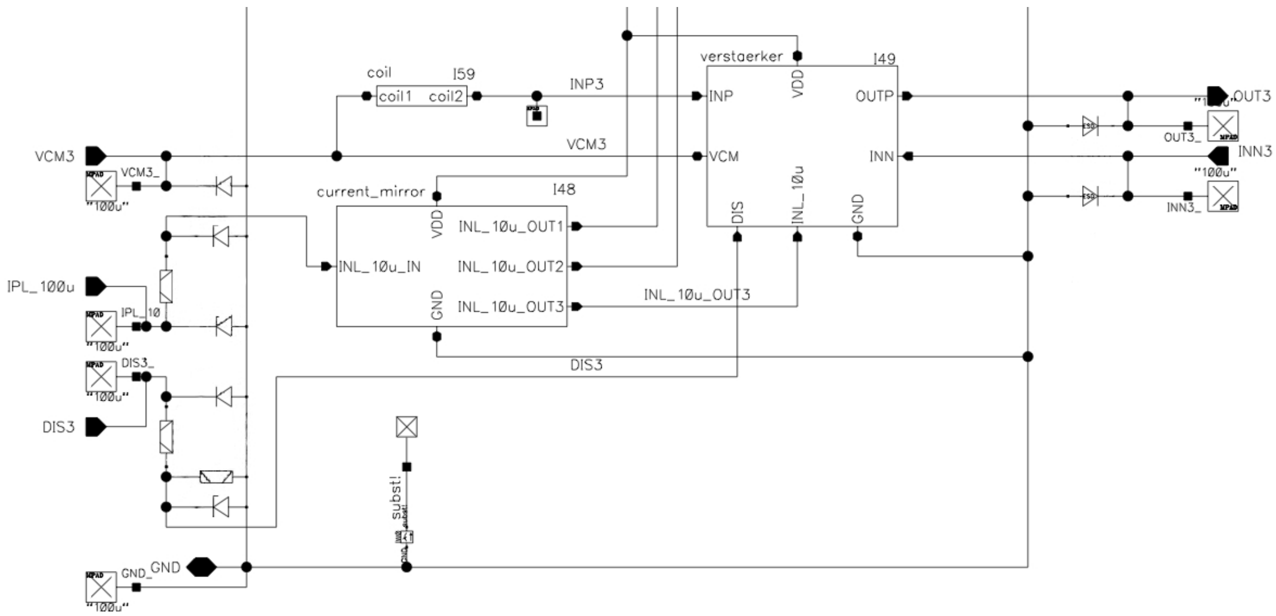

Figure 5.10: The general inside looking of the chip

Within the oval we see the resistors which ensure the gain of 40. Above it was said that we would take a 19.5 kΩ and a 500 Ω resistor, so why there is no sign of resistor with this parameters? Because of layout issues we had to switch from one resistor to two resistors in parallel and since it is much easier to layout one 19 kΩ and two 1 kΩ resistors we replaced them this way. The 500 Ω resistance was changed int two parallel connected 1 kΩ resistors. This will provide the same gain of 40 as before, according to:

$$R_{total} = \frac{R_1 R_2}{R_1 + R_2} \tag{5.4}$$

After the layout was finished and the chip was submitted to be produced it was time to think about the external circuit and controlling.

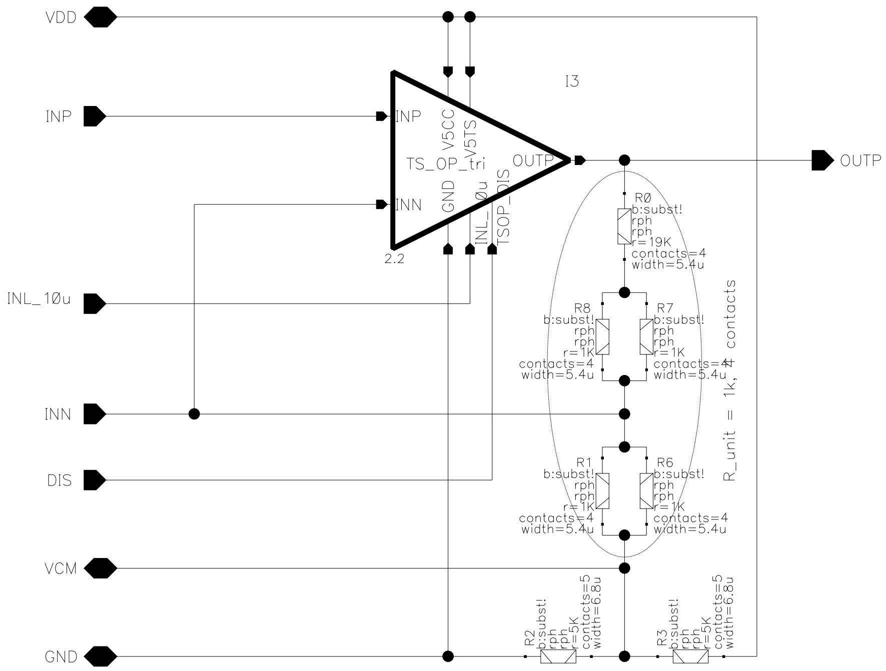

Figure 5.11: The amplifier of the chip

5.4 External circuit and controlling

As the chip was in production we had to think about the external snubber circuit: in which signal form can we address the FPGA, what are the limits for the maximum and minimum voltages, how can the requested ripples be produced?

The first specification was, that the maximum voltage power the FPGA is able to handle is 3.3 V, the minimum was set to 0. So, based on the chip provided outcome, we had to generate ripples between 0 V and 3.3 V. The solution for this problem was a comparator with hysteresis, also called a Schmitt trigger (see Figure 5.12). This comparator works with a positive feedback which allows it to switch status at a special given threshold. By configuring the resistances one can define the low and high threshold.

According to the previous picture of the Schmitt trigger V_1 determines at which time the comparator switches, which way it switches is set by the value of V_2. Here V_+ comes into play, if V_2 is lower than V_+, V_{out} raises at 3.3 V, but if $V_2 > V_+$ the output voltage gets to ground.

The prefixed values are:

- V_+ = 1.65 V
- V_{out} = 3.3 V
- R_2 = 1 kΩ

To configure the high threshold value ($V_+ > V_2$) with $V_1 = 3\,V$ we used following formula to calculate the second resistor value for R_1:

$$V_+ = V_1\left(\frac{R_2}{R_2+R_1}\right) \qquad \Rightarrow \qquad R_1 = \left(\frac{V_1}{V_+}R_2\right) - R_2 \tag{5.5}$$

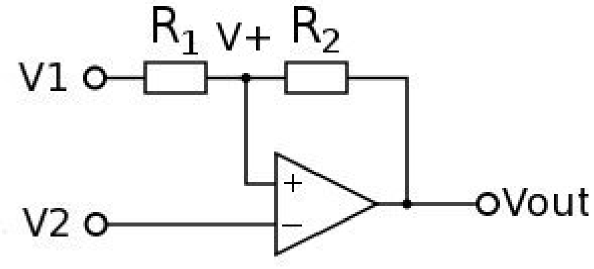

Figure 5.12: Schmitt trigger

$$R_1 = 818\,\Omega$$

As for the low threshold voltage ($V_+ < V_2$) we now determined if voltage V_1 fits our signal:

$$V_+ = V_1 + (V_{out} - V_1)\frac{R_1}{R_1 + R_2} \quad \Rightarrow \quad V_1 = \frac{(R_2 * V_+) - R_1(V_{out} - V_+)}{R_2} \tag{5.6}$$

$$V_1 = 0.3003\,V$$

This was an agreeable value we could work with, so we simulated once again, this time with a comparator like above after the output of the chip and received following Figure 5.13.

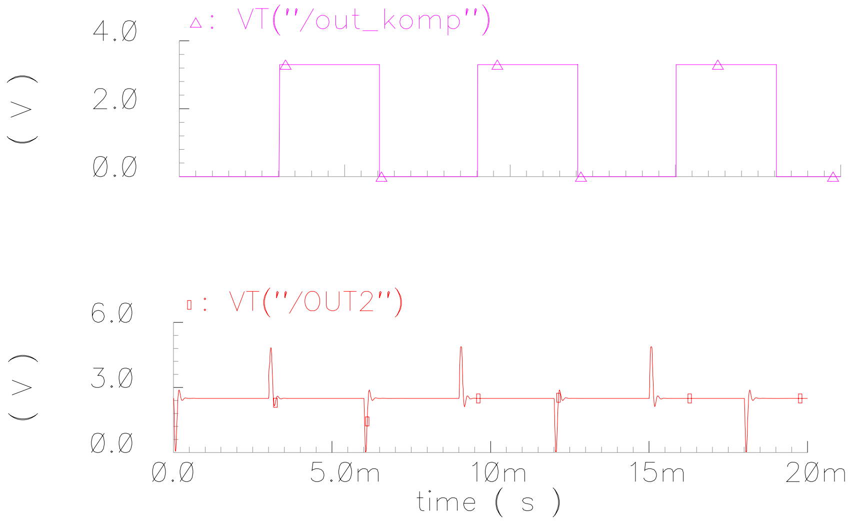

Figure 5.13: Schmitt trigger output

The pink signal shows the output of the comparator with the ripples min and max from 0 V to 3.3 V, as required. The red signal, which is the output of the chip, was added to the measurement as comparison and to see if the comparator works as expected.

With this setup the hardware configuring was finished so far. The next challenge was to code the controller structure, which means to program a FPGA in VHDL (Very High Speed Integrated Circuit Hardware Description Language) and to write a piece of code in C for the controlling.

The program had three options:

- direct input
- input with number of rotations and windings
- input with requested angle and the ratio of the gear

The direct input had three options: start, stop and turn. The motor will react immediately and it also will change its running direction at every new input.

The second input choice may be the one with most practical use. Here the user can define for how many rotations the motor should turn. This option requires one additional information, the number of windings within the motor. Only with this information the system will be able to calculate the exact amount of ripples it takes till the motor has finished its dedicated number of revolutions.

The third option is the trickiest one. At this input method the number of turns has to be computed from the information about the gear ratio and the desired angle.

Chapter 6

Conclusion and outlook

As a summary we can say that the presented method should be an easy and efficient way to measure the torque of a miniature DC motor. We have to say ’should’ because unfortunately there was a mistake at the manufacturing, respectively the layout, of the chip. After the chip arrived from fabrication we did some measuring and testing (confere Figures A.5 and A.6) to see if our approach works as we expected. But soon we figured out that the chip was not responding as expected. First we thought of an error of the setup and the measurement environment. We started to look at the soldered connections and if the supply gets to the chip, but everything was fine. After repeated checks of the setup, which did not reveal any error, we had to think of different possibilities why the chip does not work. We also considered that the method itself may not work but we did not want to believe this, as this would also contradict the practical test with the air coils. We began to search the design and layout of the chip, also the amplifiers, for example if there was something wrong with the adjustment of the amplifiers at the final layout.

Finally we found the well hidden error: the chip was ordered with four metal layers but designed only with three layers. Therefore no connection between the copper and the second metal layer exists, there is no possible way that this chip would ever perform.

In spite of that we still have the results of our simulations and based on this knowledge the developed method should be able to work as predicted. With the chip and some controlling unit one should be able to drive the motor for a given amount of revolutions, or to tell the actual position of the flap.

For further work a functioning chip would have to be tested how it operates under real life environment within an engine-bay and how the coils absorb the disturbances. It would be very interesting to know how the different coils will react, especially the two side-by-side coils with the inversely arranged windings.

For the future we think that this method may catch the interest of the automobile industry and perhaps it will be part of prospective cars.

Appendix A

Appendix

A.1 Chip layout

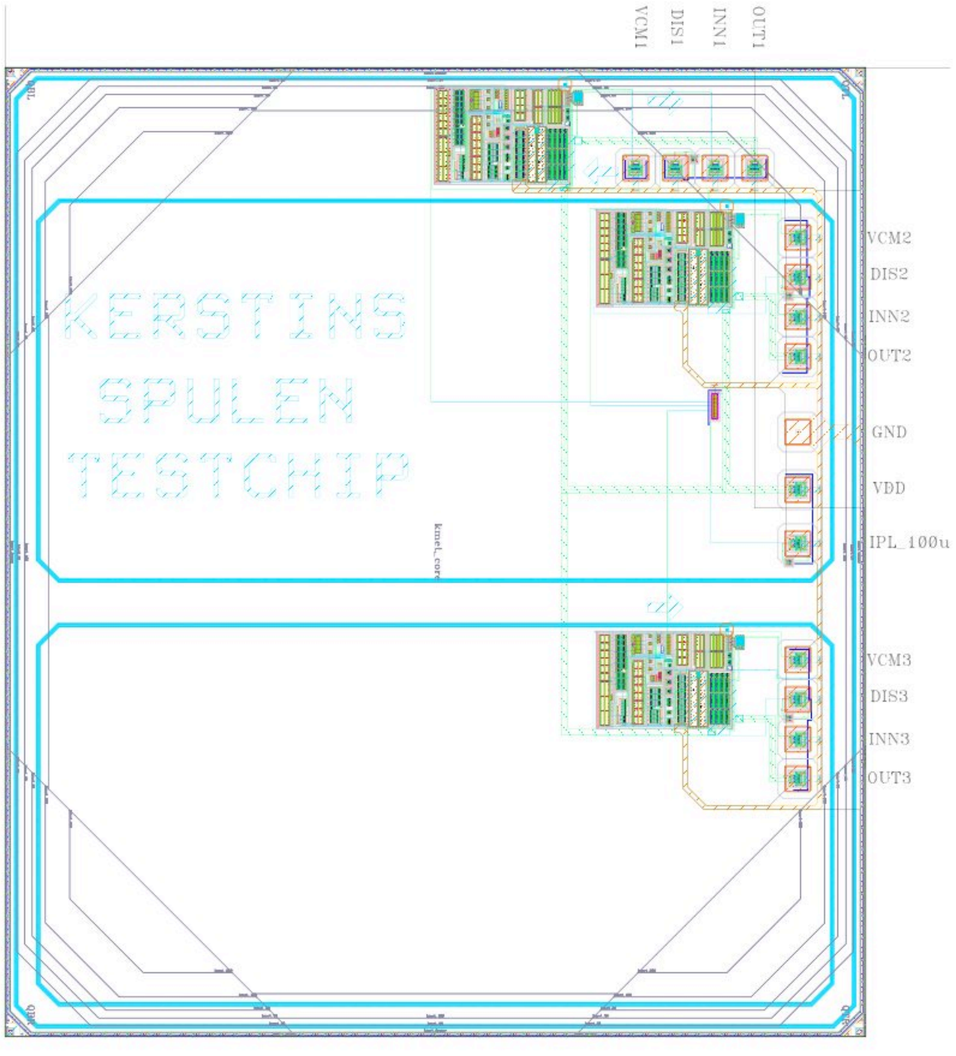

Figure A.1: Layout overview

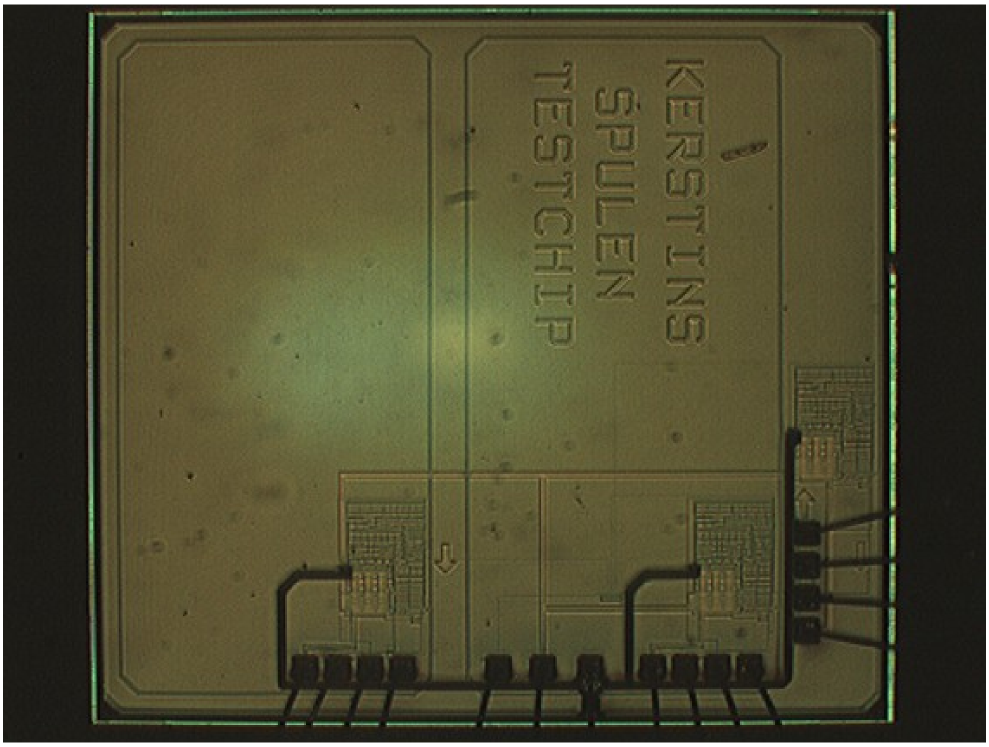

Figure A.2: Photo of the chip

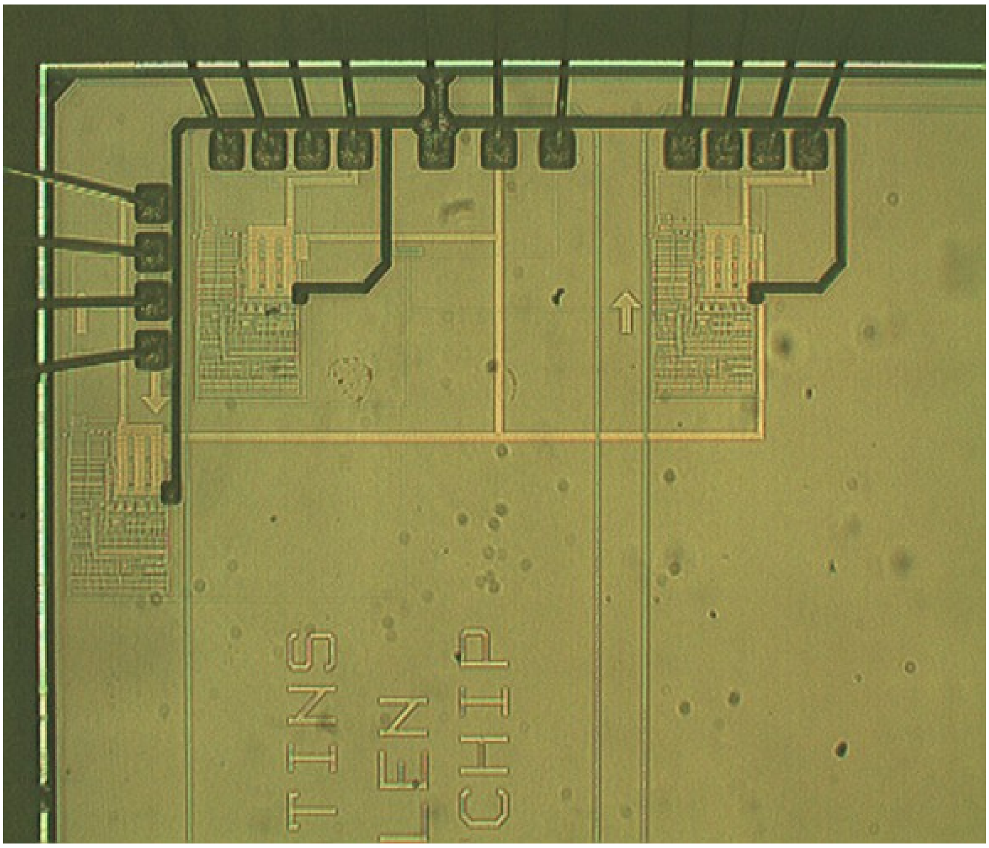

Figure A.3: Chip part photographed

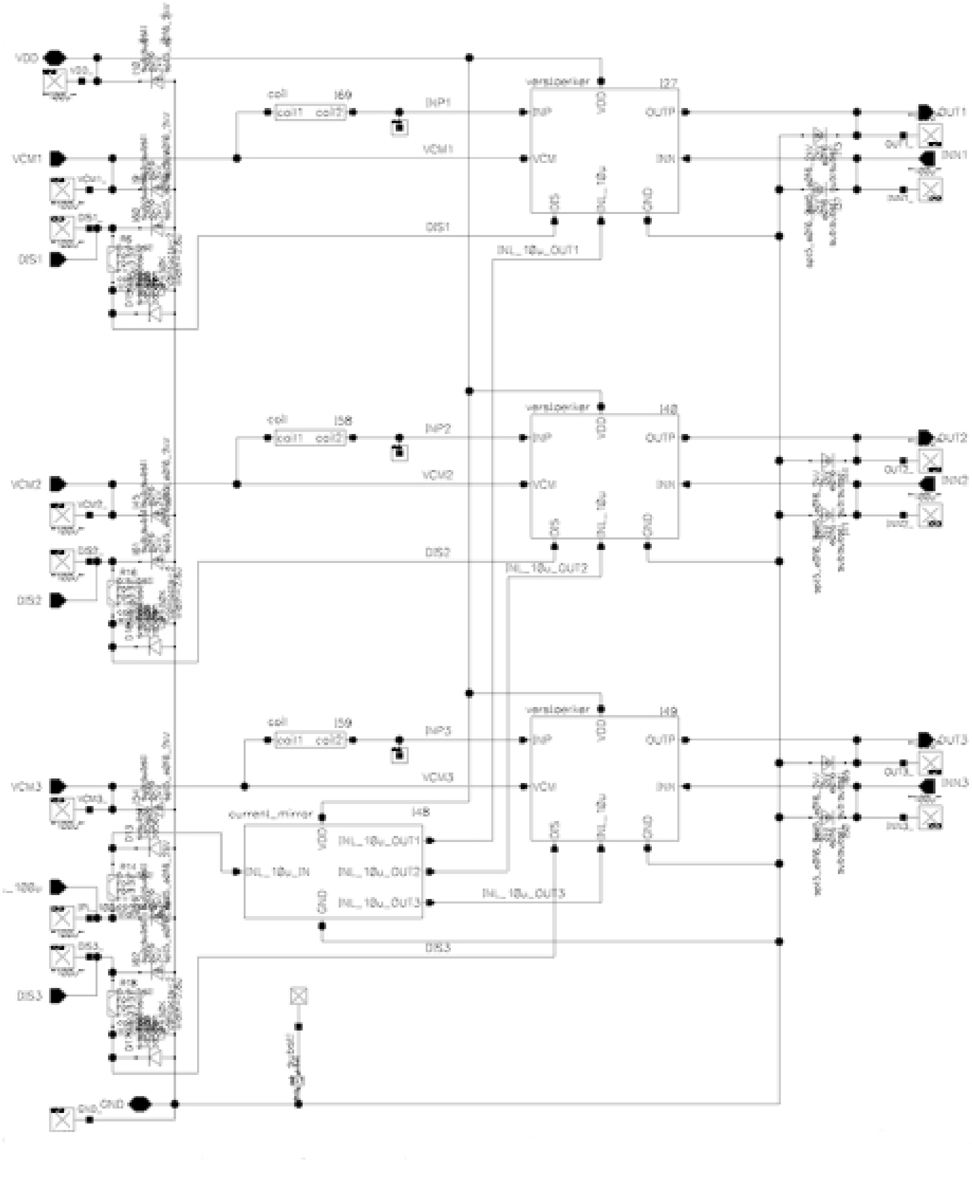

Figure A.4: A Look at the inside of the chip

A.2 Measurement setup chip

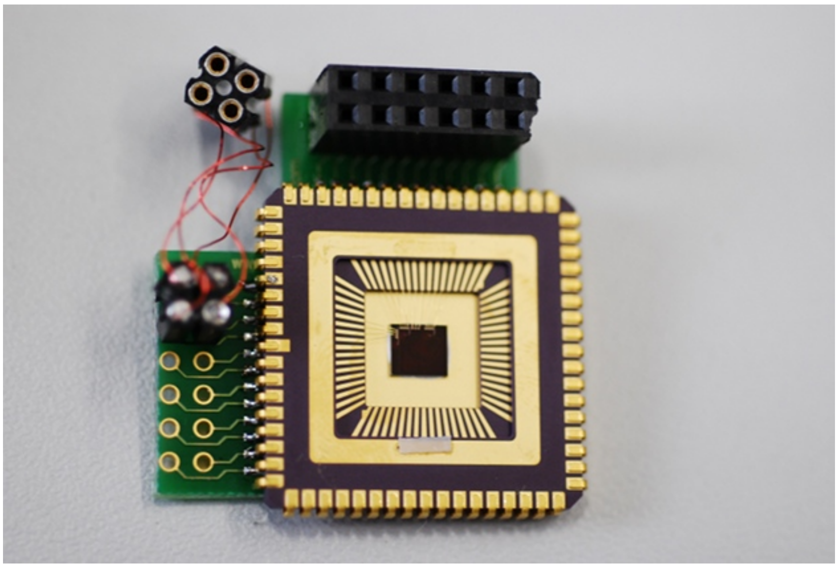

Figure A.5: Adapted chip setup setup for measuring

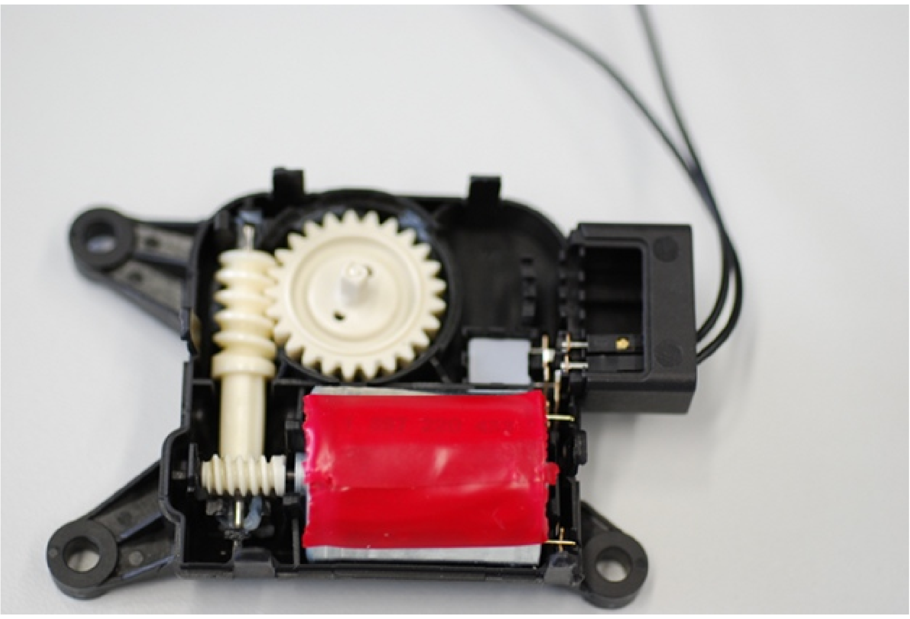

Figure A.6: Adapted motor for measurement setup

The motor was covered with electrical tape to protect the chip, which was laid directly at the motor to gain the best results.

Bibliography

[1] Manfred Albach. *Grundlagen der Elektrotechnik 1*. Pearson Studium, 2005. (Not cited.)

[2] Manfred Albach. *Grundlagen der Elektrotechnik 2*. Pearson Studium, 2005. (Not cited.)

[3] Keith Andrews. Writing a thesis: Guidelines for writing a master's thesis in computer science. Graz University of Technology, Austria, July 2006. (Not cited.)

[4] Werner Böhm. *Elektrische Antriebe*. Vogel Fachbuch, Kamprath-Reihe: Technik, 2002. (Not cited.)

[5] Nikos Drakos and Ross Moore. LaTeX2HTML, 2004. (Not cited.)

[6] Hanskarl Eckhardt. *Grundzüge der elektrischen Maschinen*. B.G. Teubner, 1982. (Not cited.)

[7] Günther Eibensteiner and Christian J. Zöpfl. Der gleichstrommotr und wechselstrommotor, 2000. Schulversuch. (Not cited.)

[8] Rolf Fischer. *Elektrische Maschinen*. Hanser, thirteenth edition, 2006. (Cited on page 30.)

[9] Klaus Fuest and Peter Döring. *Elektrische Maschinen und Antriebe*. Friedr. Vieweg & Sohn Verlag, 2004. (Not cited.)

[10] J. David Irwin and Jr. David V. Kerns. *Introduction to electrical engineering*. Prentice-Hall, Inc., 1995. (Not cited.)

[11] T. Kenjo and S. Nagamori. *Permanent-Magnet and Brushless DC Motors*. Oxford University Press, 1985. (Cited on pages 4, 5, 12, 18 and 19.)

[12] Leo. Leo English-German Dictionary, 2004. (Not cited.)

[13] Helmut Moczala. *Elektrische Kleinmotoren*. expert verlag, 1987. (Not cited.)

[14] RobertBoschGmbH. *Autoelektrik Autoelektronik*. Robert Bosch GmbH, fifth edition, 2007. (Cited on page 29.)

[15] Prof. Dr.-Ing. Rolf Roskam. Elektrische antriebs- und steuerungstechnik, 2004. script. (Not cited.)

[16] Dipl. Ing. E. Ruban. Fahrzeugbau, 2006. Skriptum. (Not cited.)

[17] Karl Ruschmeyer. *Motoren und Generatoren mit Dauermagneten*. expert verlag, 1983. (Not cited.)

[18] Dierk Schröder. *Elektrische Antriebe - Grundlagen*. Springer Verlag, third edition, 2007. (Cited on pages 3 and 4.)

[19] TeX Users Group. Tex users group home page, 2004. (Not cited.)

[20] Dipl.-Ing. Kai Wustlich, Dipl.-Ing. Johannes Gremme, Dipl.-Ing. Martin Engelhardt, and Dipl.-Ing. Andreas Schuch. Integrationskonzept für das klimagerät der mercedes-benz s-klasse. *ATZelektronik*, 108:288–295, 04/2006. (Cited on page 22.)